6721-0021 Vacuum Switch 2596632

- 6721 vacuum switch
- Vacuum range - 185 to 670 mBar
- Pressure connection - 4mm side entry spout
- Single pole change over contacts
- Diaphragm material - Neoprene
- Burst pressure - 2550 mbar
- Operating Temperature -5°C to +70°C
- Electrical rating - 21A 250V AC
- Mechanical life - 10,000,000 cycles



Outline Dimensions

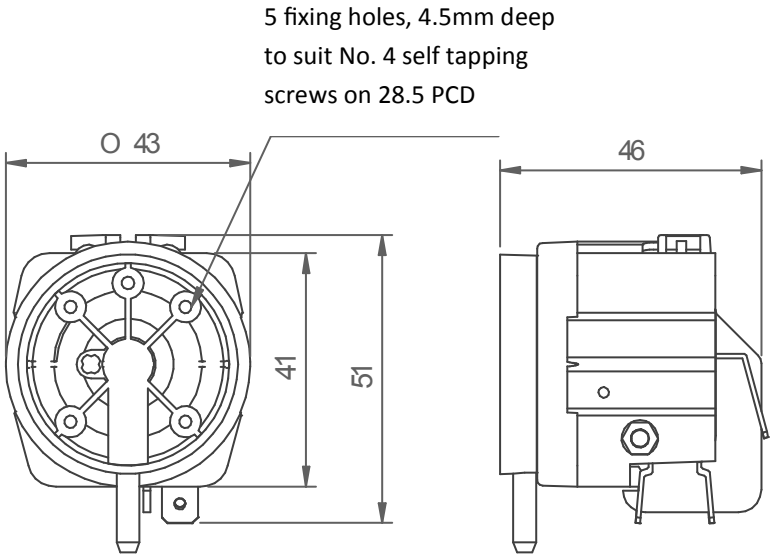

herga Technology Ltd