Using Safety Rope Switches: **Guardian Line Series**

FLEXIBLE ROLLER EYEBOLT WITH ADJUSTMENT APPLICATION:

When using rope pull switch systems on conveyors the rope is supported along the conveyor length by equally spaced eyebolts.

Traditional eyebolts are made from solid metal and offer an eyelet to support the rope and provide a catenary between eyebolts to deflect the rope during pulling. On long conveyors eyebolt mounting positions can vary along the length of the conveyor and therefore mis-alignment of the eyebolts along the conveyor can cause a friction problem making the systems difficult to operate.

After operation the rope system, the rope may not be able to move (due to the friction) and allow the switch mechanism to be reset.

Ultimately the rope can be damaged or wear to breaking point.

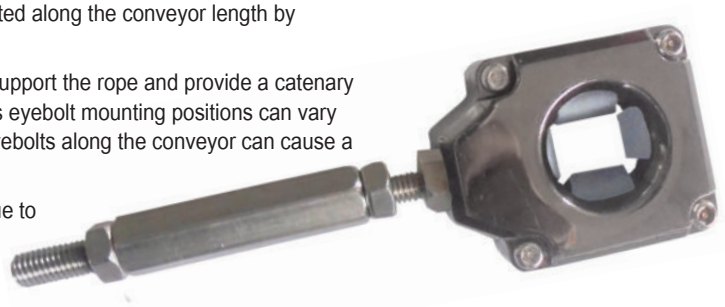

PROPERTIES & FEATURES:

Adjustable mounting positions provides mounting flexibility in adjustment in two planes. This better copes with uneven positioning of eyebolts over the length of the conveyor or conveyors with radius profiles.

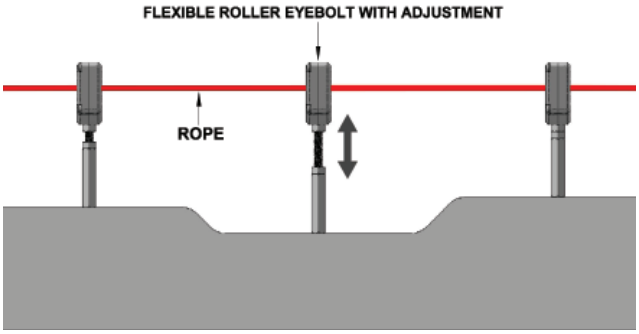

Moveable rollers within the eyebolt structure to ensure no loss of movement due to friction when pulled in any direction.

The position of the rollers allow contact with the rope through 360 degrees within the eyelet of the eyebolt.

Friction is eliminated due to the fact that at any point of contact between the rope and a roller there is rotational movement.

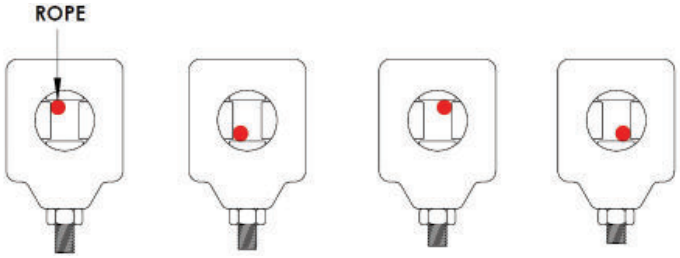

The eyebolt position relative to the mounting frame of the conveyor can be adjusted in length away from the conveyor mounting frame by turning an integral adjustable threaded thimble. The eyebolt head can be rotated to provide further adjustment depending upon the direction of the rope along the conveyor length. The final position of the head can be fixed by the locknut or left free to rotate during use.

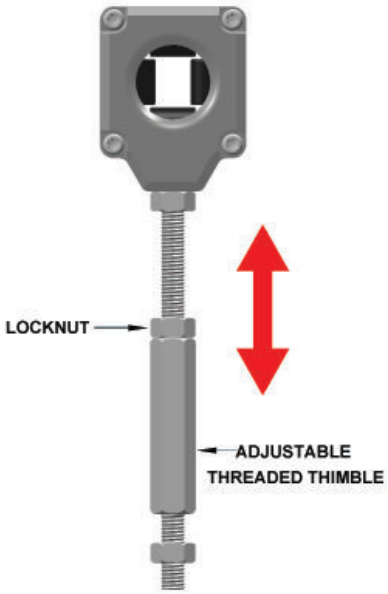



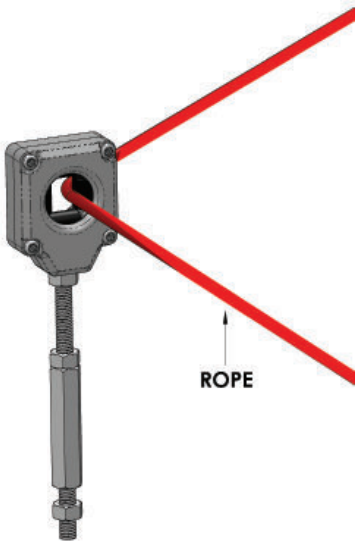

FLEXIBLE ROLLER EYEBOLT WITH ADJUSTMENT

ORDERING:

Thimble, nuts and bolt are manufactured in stainless steel.
Housing is manufactured in mirror polished die cast metal.
Rollers are manufactured from plastic

SALES NUMBER	ITEM
140048	Flexible Roller Eyebolt with Adjustment
140099	Flexible Roller Eyebolt with Nuts - No Adjustment



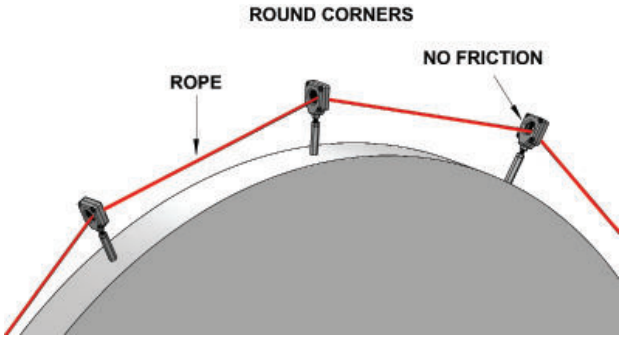

Using Safety Rope Switches: **Guardian Line Series**

GUARDIAN LINE CONNECTIVITY ACCESSORIES (see p175) DIMENSIONS:

TENSIONER/GRIPPER SYSTEM

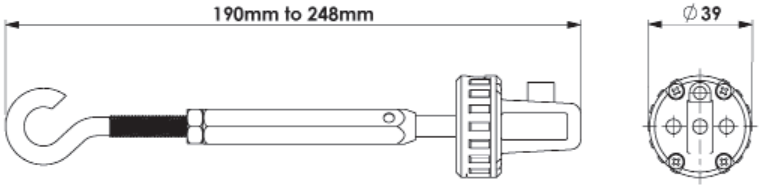

SALES NUMBER	ITEM	MATERIAL
140019	Rope Tensioner Gripper	Stainless Steel
140020	Rope Tensioner Gripper	Galvanised Steel

UNIVERSAL PULLEY

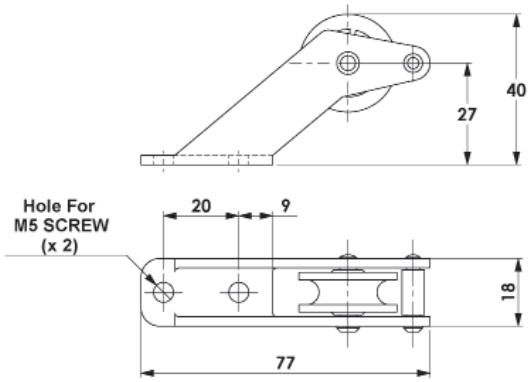

SALES NUMBER	ITEM	MATERIAL
140021	Universal Pulley	Stainless Steel
140064	Universal Pulley	Galvanised

STAINLESS STEEL SAFETY SPRING

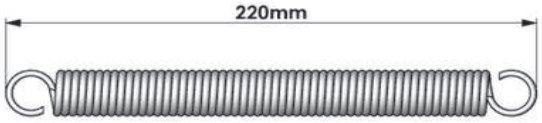

SALES NUMBER	ITEM	MATERIAL
143043	220mm Long Safety Spring	Stainless Steel

FLEXIBLE ROLLER EYEBOLT WITH ADJUSTMENT

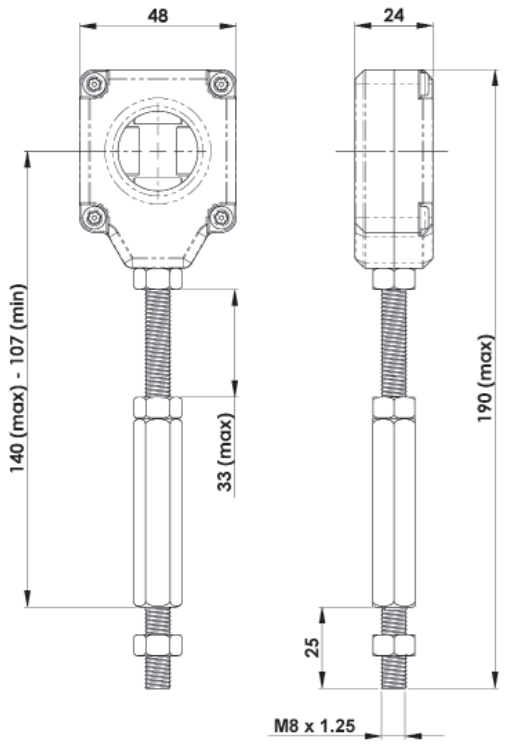

SALES NUMBER	ITEM
140048	Flexible Roller Eyebolt with Adjustment

FLEXIBLE ROLLER EYEBOLT WITH NUTS NO ADJUSTMENT

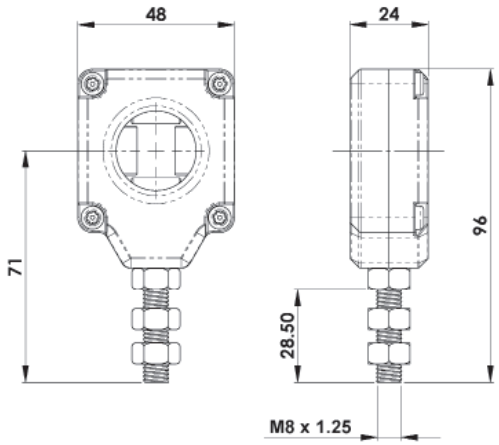

SALES NUMBER	ITEM
140099	Flexible Roller Eyebolt with Nuts - No Adjustment

STANDARD EYEBOLT 84mm LONG

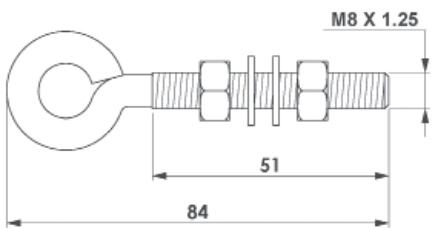

SALES NUMBER	ITEM	MATERIAL
140045	Eyebolt (8 Pack) 84mm Long	Stainless Steel
140046	Eyebolt (8 Pack) 84mm Long	Galvanised

STANDARD EYEBOLT 130mm LONG

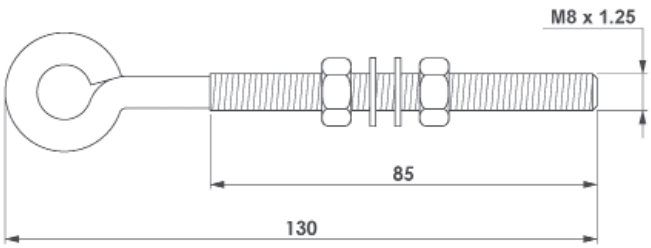

SALES NUMBER	ITEM	MATERIAL
140126	Eyebolt (8 Pack) 130mm Long	Stainless Steel
140127	Eyebolt (8 Pack) 130mm Long	Galvanised