HIRSCHMANN® Test & Measurement
A BRAND OF SKS

SKS® SKS Kontakttechnik GmbH

Clamp-type test probe

KLEPS 2900



CE

Product	KLEPS 2900
description	Safety clamp-type test probe with rigid hook to ensure secure clamping of eyes, pins, wires and boards. 4 mm brass socket connection.Connects with safety measuring leads.
operating instruction	BA458
article-no. / *colour	9723091xx 00 black 01 red
drawing	
	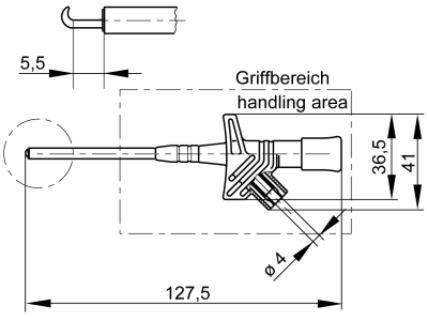
technical data	
connection	unsprung socket 4 mm
rated voltage(1)	AC/DC 1000 V
measurement cat. acc. to IEC 61010	CAT III
rated current(1) (consider derating curve)	20 A
material plug	brass, nickel plated
material socket	brass
housing material	PBT
temperature range acc. To IEC61010(2)	-25 °C to +70 °C
inflammability class acc. to UL 94 (only valid for basic material of housing)	HB

4 mm safety system

clamp type	contact hook
clamping range	5,5 mm
standard	IEC 61010

(1) for normal environmental conditions -5°C to +40°C
(2) contact the manufacturer for applications at deviating temperature ranges
stand: 10.01.2019