Air preparation unit, 3-part, Series 651

A651A0000003636

General series information
AVENTICS Series 651 Air Preparation Units

- The AVENTICS Series 651 is an easy-to-install line of pneumatic filters, regulators and lubricators (FRLs) that offer the industry´s highest flow rates and widest temperature ratings. Available in 1/8-inch, and 1/4-inch port sizes, these FRLs are ideal for automotive and tire, packaging, food and beverage, and process applications requiring highly reliable operation and robust, modern-looking equipment.



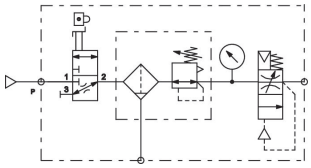

Technical data

Industry	Industrial
Parts	Air preparation units
Components	Shut-off valve Filter pressure regulator Filling valve
Reservoir	Reservoir polycarbonate
Port	G 1/4
Filter porosity	25 µm
Condensate drain	semi-automatic, open without pressure
Pressure gauge	With integrated pressure gauge
Working pressure min.	3.8 bar
Working pressure max	10 bar
Min. ambient temperature	-10 °C
Max. ambient temperature	50 °C
Certificates	ATEX optional
Regulation range min.	0.5 bar

Regulation range max.	10 bar
Lock type	not lockable
Type	3-part
Type	Can be assembled into blocks
Medium	Compressed air Neutral gases

Material

Housing material	Aluminum
Seal material	Nitrile butadiene rubber
Material reservoir	Polycarbonate
Material condensate drain	Plastic
Part No.	A651A0000003636

Technical information

The pressure dew point must be at least 15 °C less than ambient and medium temperature and may not exceed 3 °C.

The oil content of compressed air must remain constant during the life cycle.

Use only the approved oils from AVENTICS. Further information can be found in the “Technical information” document (available in https://www.emerson.com/en-us/support).

Dimensions

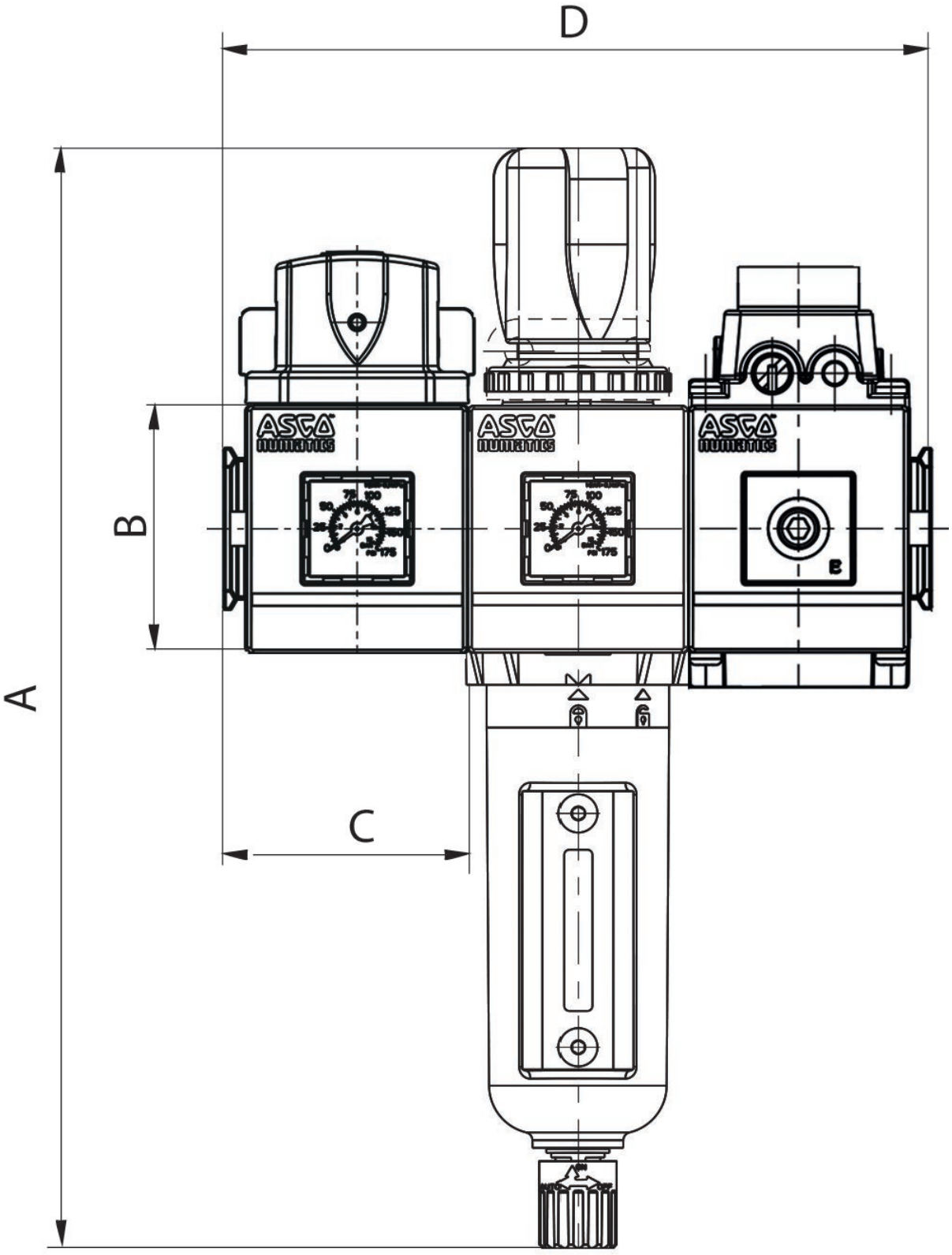

Series	651
A	241
B	56
C	50
D	150

Accessories overview

