# O6T309

## Diffuse reflection sensor

O6T-FPKG/AS/4P

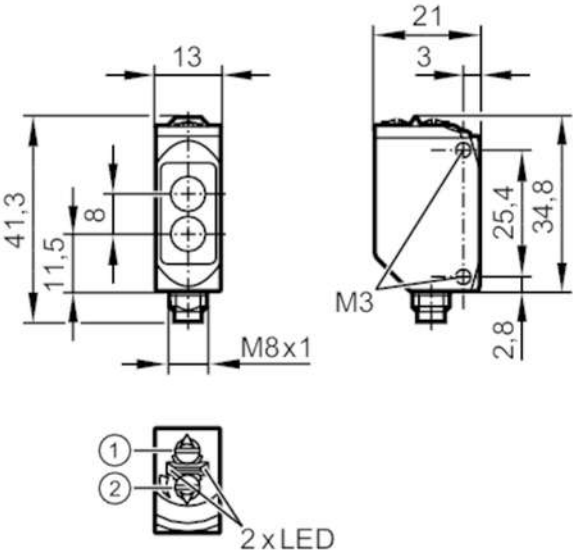


1: output function switch
2: potentiometer sensitivity

| | | |
|---|---|---|
| **Product characteristics** | | |
| Type of light | | red light |
| Housing | | rectangular |
| **Application** | | |
| Function principle | | Diffuse reflection sensor |
| **Electrical data** | | |
| Operating voltage | [V] | 10...30 DC |
| Current consumption | [mA] | 16;  ((24 V)) |
| Protection class | | III |
| Reverse polarity protection | | yes |
| Type of light | | red light |
| Wave length | [nm] | 633 |
| **Outputs** | | |
| Electrical design | | PNP |
| Output function | | light-on/dark-on mode;  (selectable) |
| Max. voltage drop switching output DC | [V] | 2.5 |
| Permanent current rating of switching output DC | [mA] | 100 |
| Switching frequency DC | [Hz] | 1000 |
| Short-circuit protection | | yes |
| Type of short-circuit protection | | pulsed |
| **Detection zone** | | |
| Range | [mm] | 5...500;  (white paper 200 x 200 mm 90% remission) |
| Setting range | [mm] | 100...500 |

# O6T309

## Diffuse reflection sensor

O6T-FPKG/AS/4P

| | | | |
|---|---|---|---|
| Range adjustable | | yes | |
| Max. light spot diameter | [mm] | 15 | |
| Light spot dimensions refer to | | at maximum range | |
| **Interfaces** | | | |
| Communication interface | | IO-Link | |
| Transmission type | | COM2 (38,4 kBaud) | |
| IO-Link revision | | 1.1 | |
| SDCI standard | | IEC 61131-9 | |
| Profiles | | Smart Sensor: Device Identification; Binary Data Channel | |
| SIO mode | | yes | |
| Required master port type | | A | |
| Min. process cycle time | [ms] | 2.5 | |
| IO-Link process data (cyclical) | | **function** | **bit length** |
| | | process value | 8 |
| | | binary switching information | 1 |
| IO-Link functions (acyclical) | | application specific tag; operating hours counter; switching cycles counter | |
| Supported DeviceIDs | | **Type of operation** | **DeviceID** |
| | | default | 423 |
| **Operating conditions** | | | |
| Ambient temperature | [°C] | -25...80 | |
| Protection | | IP 65; IP 67; IP 68; IP 69K | |
| **Tests / approvals** | | | |
| EMC | | EN 60947-5-2 | |
| MTTF | [years] | 681 | |
| UL approval | | UL Approval no. | E010 |
| **Mechanical data** | | | |
| Weight | [g] | 34.4 | |
| Housing | | rectangular | |
| Dimensions | [mm] | 41.3 x 13 x 21 | |
| Materials | | housing: stainless steel (316L/1.4404); plastics: PPSU; Sealing: EPDM | |
| Lens material | | PMMA | |
| Lens alignment | | side lens | |
| Tightening torque | [Nm] | 1;  (screws) | |
| **Displays / operating elements** | | | |
| Display | | switching status | 1 x LED, yellow |
| | | operation | 1 x LED, green |
| **Remarks** | | | |
| Remarks | | operating voltage "supply class 2" according to cULus | |
| Pack quantity | | 1 pcs. | |

# O6T309

## Diffuse reflection sensor

O6T-FPKG/AS/4P

## Electrical connection

Connector: 1 x M8; coding: A




### Connection

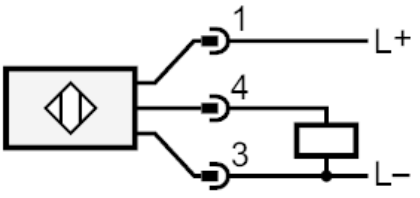


| | |
|---|---|
| 4 | OUT / IO-Link |

## Diagrams and graphs

excess gain graph

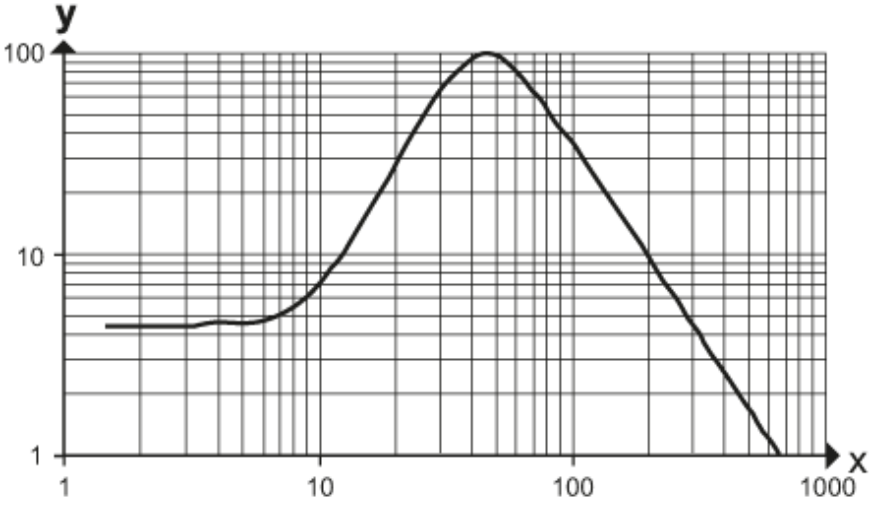


x: distance [mm]

y: excess gain factor