R1D101

Radar distance sensor

R1DAAOOKG/US/CAN

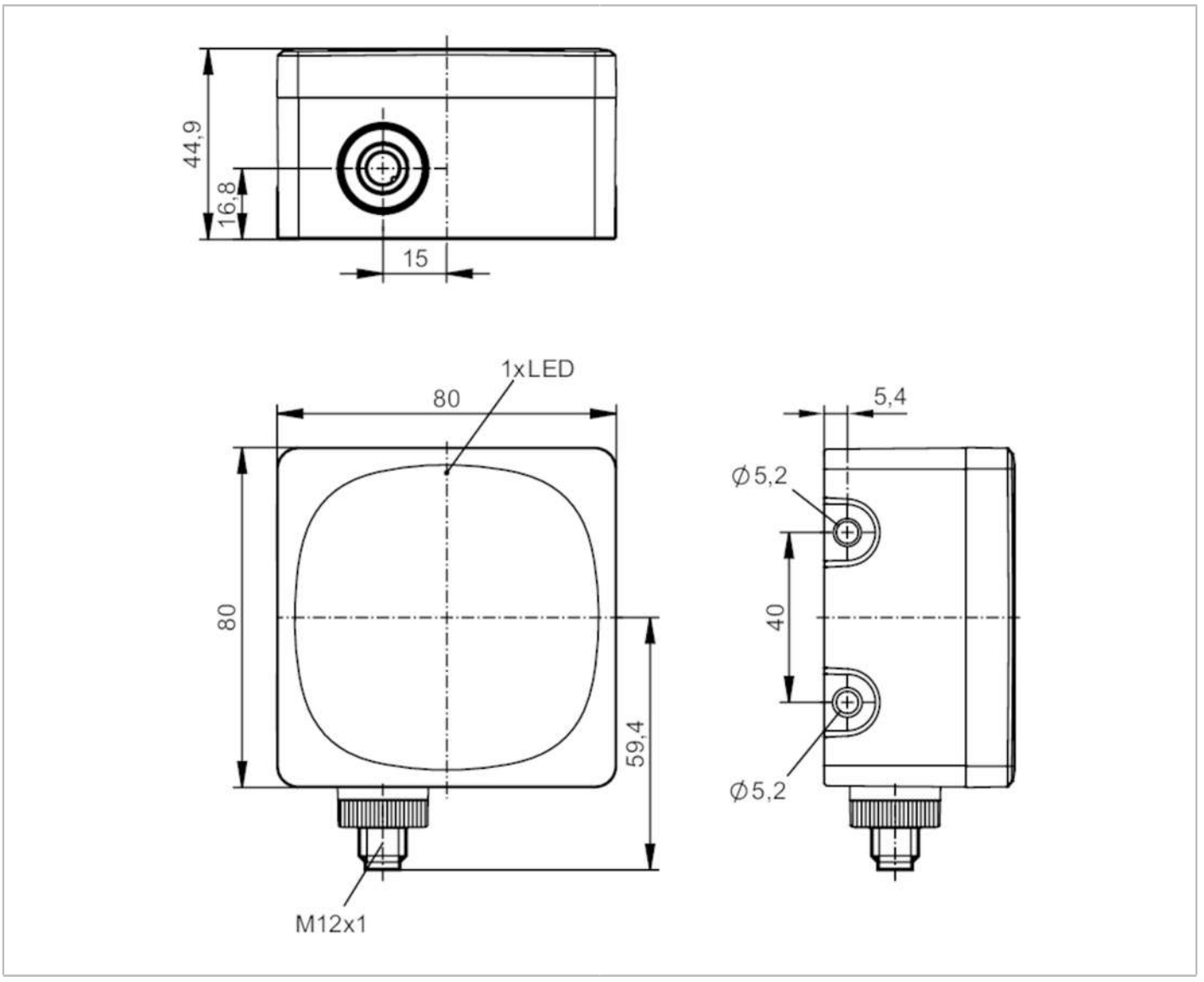

Product characteristics		
Communication interface		CAN
Housing		rectangular
Dimensions	[mm]	80 x 80 x 45
Application		
Note on radio approval		The list of countries applying the European Radio Equipment Directive 2014/53/EU (RED) can be found under “Downloads”.
Electrical data		
Operating voltage	[V]	9...32 DC; (to SELV/PELV ; energy-limited circuits according to IEC/UL 61010-1 3rd ed. cl. 9.4)
Current consumption	[mA]	< 300; (mean value: 150 mA)
Power consumption	[W]	9; (maximum)
Protection class		III
Reverse polarity protection		yes

R1D101

Radar distance sensor

R1DAAOOKG/US/CAN

Max. power-on delay time	[ms]	1000	
Operating frequency [GHz]		60...64	
Mean power spectral density EIRP [dBm/MHz]		-10	
Mean radiated power EIRP [dBm]		20	
Detection zone			
Range	[m]	0.1...50; (referred to E23014)	
Angle of aperture cylindrical	[°]	horizontal	40
		vertical	30
Measuring/setting range			
Measuring range	[m]	0.1...50; (see diagram:)	
Sampling rate	[Hz]	20	
Software / programming			
Parameter setting options		via PC with ifm Vision Assistant	
Interfaces			
Communication interface		CAN	
Number of CAN interfaces		1	
Transmission rate		250 (125...1000) kBaud	
Protocol		SAE J1939	
Factory settings		Baud rate: 250 kBit/s	
		device address (ECU): 126	
		UDS interface: 1000 kBaud	
Usage type		parameter setting; data transmission	
Note		For further information please refer to the software manual available under "Downloads"	
Operating conditions			
Ambient temperature	[°C]	-40...85	
Storage temperature	[°C]	-40...85	
Protection		IP 65; IP 66; IP 67; IP 69K; (with mounted connectors or protective caps)	
Tests / approvals			
EMC		DIN EN 61000-4-2 ESD	4 kV CD / 8 kV AD
		DIN EN 61000-4-3 HF radiated	10 V/m
		DIN EN 61000-4-4 Burst	2 kV
		DIN EN 61000-4-6 HF conducted	10 V
		DIN EN 61000-6-2	immunity / industrial environments
		EN 55032 emission	Class A
Impact resistance		IEC 62262	IK06 (1J)
Vibration resistance		DIN EN 60068-2-6 Fc	10 g 10 frequency cycles, 1 octave/minute, in 3 axes
Shock resistance		DIN EN 60068-2-27 Ea	50 g 11 ms half-sine; 10 shocks each in every direction along the 3 coordinate axes
Continuous shock resistance		DIN EN 60068-2-29 Eb	40 g 6 ms half-sine; 4,000 shocks each in every direction along the 3 coordinate axes
Fast temperature change		DIN EN 60068-2-14 Na	TA = -40°C; TB = 85°C; t1 = 30 min; t2 = < 30 s; 300 cycles
Salt spray test		DIN EN 60068-2-11 Ka	8 test cycles
Electrical safety		DIN EN 61010-2-201	electric shock / electrical supply only via SELV/PELV circuits

R1D101

Radar distance sensor

R1DAAOOKG/US/CAN

UL approval	Ta	-40...65 °C	
	Enclosure type	Type 1	
	power supply	Limited Energy	
	File number UL	E205959	

Mechanical data

Weight	[g]	0.001
Housing		rectangular
Mounting		flush mountable
Dimensions	[mm]	80 x 80 x 45
Materials		housing: PA; radome: PEI; Sealing: HNBR

Displays / operating elements

Display	operation	1x LED, green
	errors	1x LED, red

Remarks

Pack quantity	1 pcs.

Electrical connection

Connector: 1 x M12; coding: A

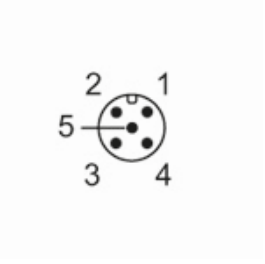

1: Screen
2: Operating voltage
3: GND
4: CAN-H
5: CAN-L

Other data

Operating mode	standard	Long range, high velocity	
max. distance	0.1...20 m	0.25...50 m	
distance resolution	100 mm	370 mm	
distance accuracy	± 5 mm	± 15 mm	
max. velocity	± 6 m/s	± 15 m/s	
velocity resolution	0.15 m/s	0.38 m/s	
speed accuracy	± 0.01 m/s	± 0.04 m/s	
Sampling rate	20 Hz	20 Hz	

distance	referred to E23013
Resolution	for the detection of two objects of the same size
accuracy	for a strong, point-shaped target

R1D101

Radar distance sensor

R1DAAOOKG/US/CAN

Diagrams and graphs

Detection zone

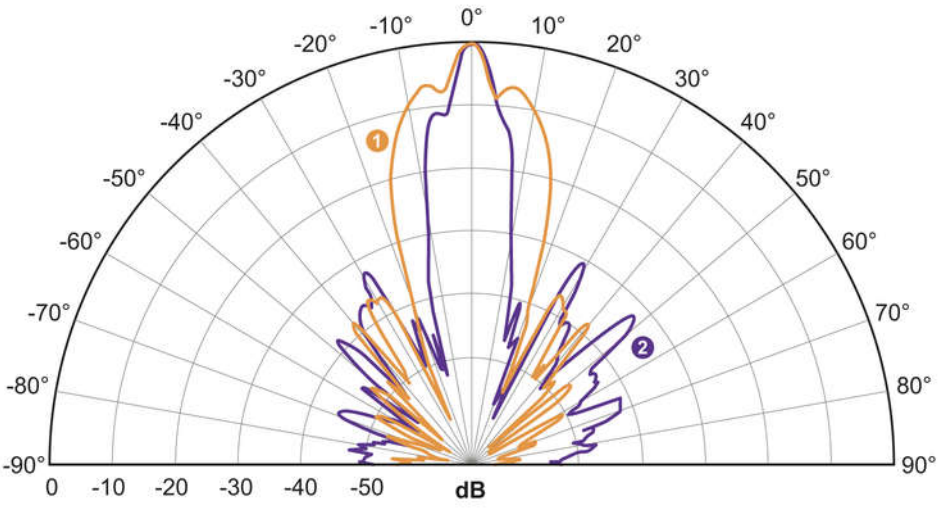

1: azimuth

2: elevation

conditions

Reflector: 4.3“ Trihedral Corner Reflector (SAJ043-S1)

RCS: 8 dBm²

distance: 5 m

operating frequency: 62 GHz