Serious Deluxe Power Tablet Stand Specifications

Parameter	Value
Stand Style	Mobile
Device type	Tablet
Locking Casters	Yes
Lockable Platform	Yes
Security Lockable Platform	Removable Key
Powered	USB-C
Device Size	Up to 12.9”
Weight	12kg
Height	762 – 1422 mm
Arm Reach	600 mm
Platform Rotation	360°
Arm Rotation	120°
Colour	Black & Gunmetal
Accessories	Book Platform
Part No.	LTG2DSC





	Dimensions				Materials	Finishes
Base	*Length: 330 mm*	Width: 330 mm	Height: 92 mm		ABS + 1% GF & stone	Black
Platform	*Length*	*179-320 mm*	Width	109-218 mm	ABS + 1% GF	Black
Arm	*Length*	*1330mm*			Anodized Aluminium	Gunmetal

Serious Brands Ltd, Chapel Offices, Bierton, Bucks, HP22 5DW, Great Britain, Tel: +44 (0)1296 395400

Web: www.levostore.co.uk E-mail: info@levostove.co.uk

DISCLAIMER. All product information provided is, to the best of Serious Brands knowledge, accurate as of the date of publication. When ordering, refer to www.levostore.co.uk for current versions of: (a) relevant product documentation (including the relevant product data sheets); (b) Serious Brands terms and conditions of sale; and (c) the relevant product warranty. To the extent that any contract is deemed formed between Serious Brands and the purchaser of Serious Brands products and/or an end-user, versions of documents available at www.levostore.co.uk as at the date of sale shall be the versions incorporated therein. In the event of any discrepancy between this document or information provided at www.levostore.co.uk the latter shall prevail.

Serious Deluxe Power Tablet Stand technical.

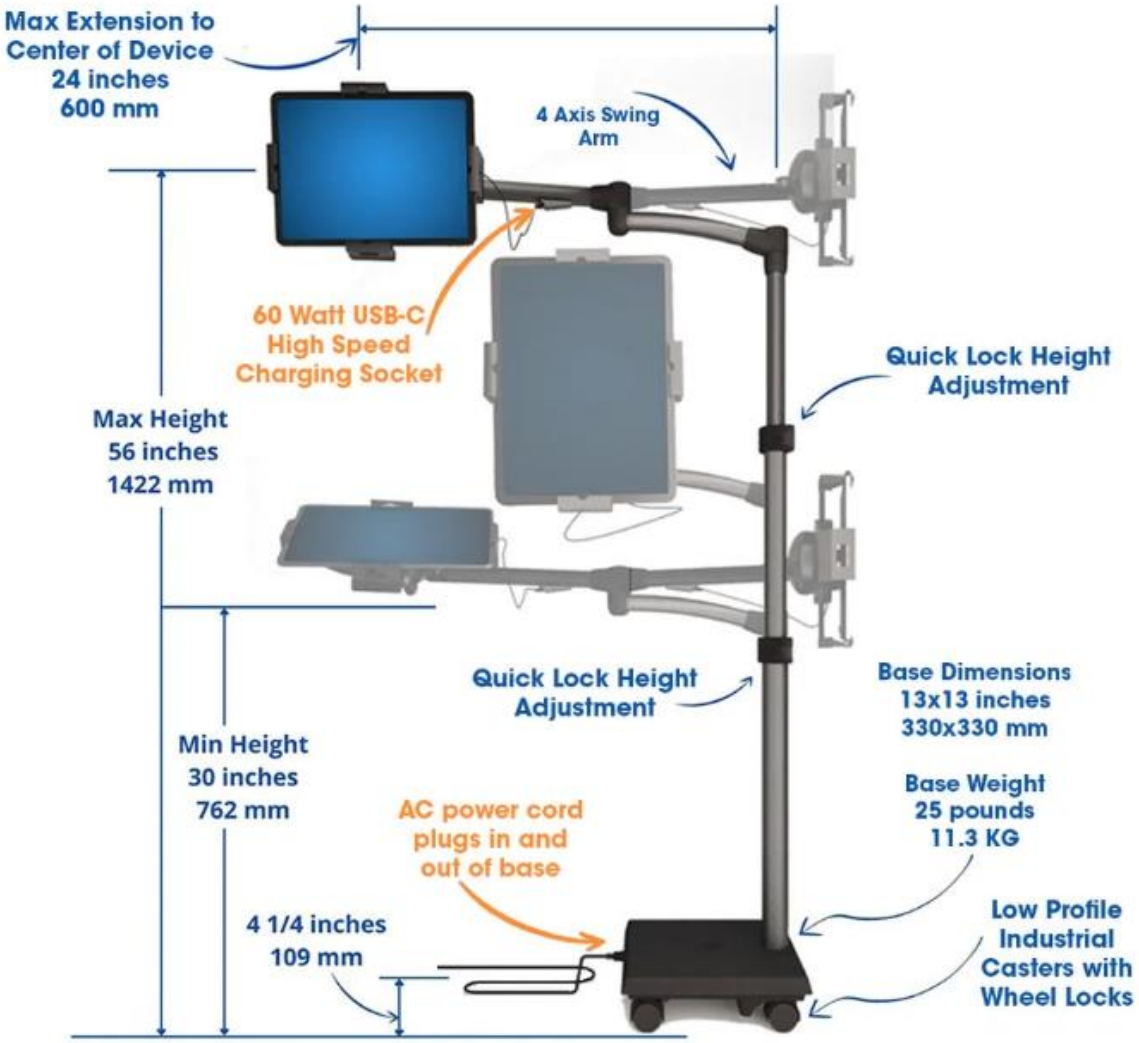

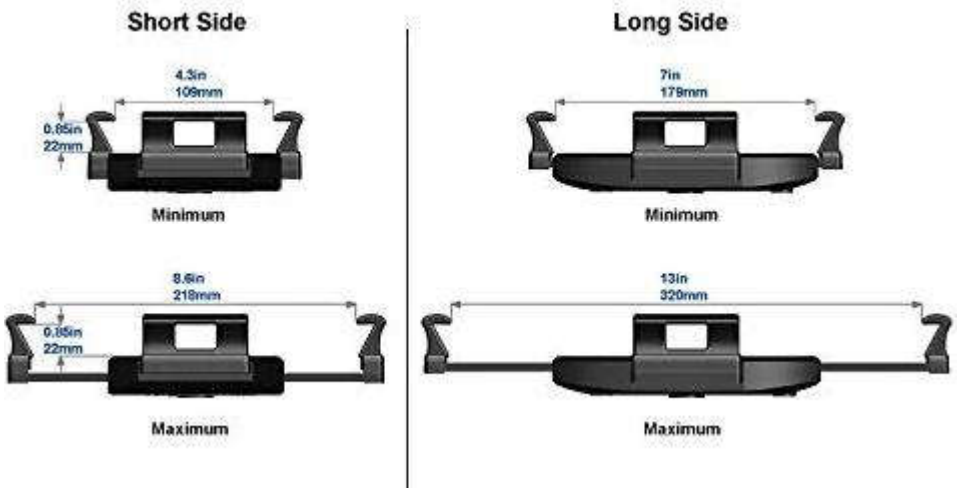

Serious Brands Ltd, Chapel Offices, Bierton, Bucks, HP22 5DW, Great Britain, Tel: +44 (0)1296 395400

Web: www.levostore.co.uk E-mail: info@levostove.co.uk

DISCLAIMER. All product information provided is, to the best of Serious Brands knowledge, accurate as of the date of publication. When ordering, refer to www.levostore.co.uk for current versions of: (a) relevant product documentation (including the relevant product data sheets); (b) Serious Brands terms and conditions of sale; and (c) the relevant product warranty. To the extent that any contract is deemed formed between Serious Brands and the purchaser of Serious Brands products and/or an end-user, versions of documents available at www.levostore.co.uk as at the date of sale shall be the versions incorporated therein. In the event of any discrepancy between this document or information provided at www.levostore.co.uk the latter shall prevail.

Serious Deluxe Power Tablet Stand Accessories.

Parameter	Value
Stand Style	Accessory
Device type	Book
Attachment	Push & Click
Size	420mm x 300mm
Max Book weight	1.8kg
Materials	ABS + 1% GF & Velcro straps
Part No.	LBPG2



Notes:

- The Tablet holder requires minor assemble
- Book platform can be interchanged with the Tablet platform
- Not suitable for laptops

Serious Brands Ltd, Chapel Offices, Bierton, Bucks, HP22 5DW, Great Britain, Tel: +44 (0)1296 395400
Web: www.levostore.co.uk E-mail: info@levostove.co.uk

DISCLAIMER. All product information provided is, to the best of Serious Brands knowledge, accurate as of the date of publication. When ordering, refer to www.levostore.co.uk for current versions of: (a) relevant product documentation (including the relevant product data sheets); (b) Serious Brands terms and conditions of sale; and (c) the relevant product warranty. To the extent that any contract is deemed formed between Serious Brands and the purchaser of Serious Brands products and/or an end-user, versions of documents available at www.levostore.co.uk as at the date of sale shall be the versions incorporated therein. In the event of any discrepancy between this document or information provided at www.levostore.co.uk the latter shall prevail.