EVC620

Y connection cable

YDOAH040MSS0004H04STGH040MSS

Please see the technical note under "Downloads"

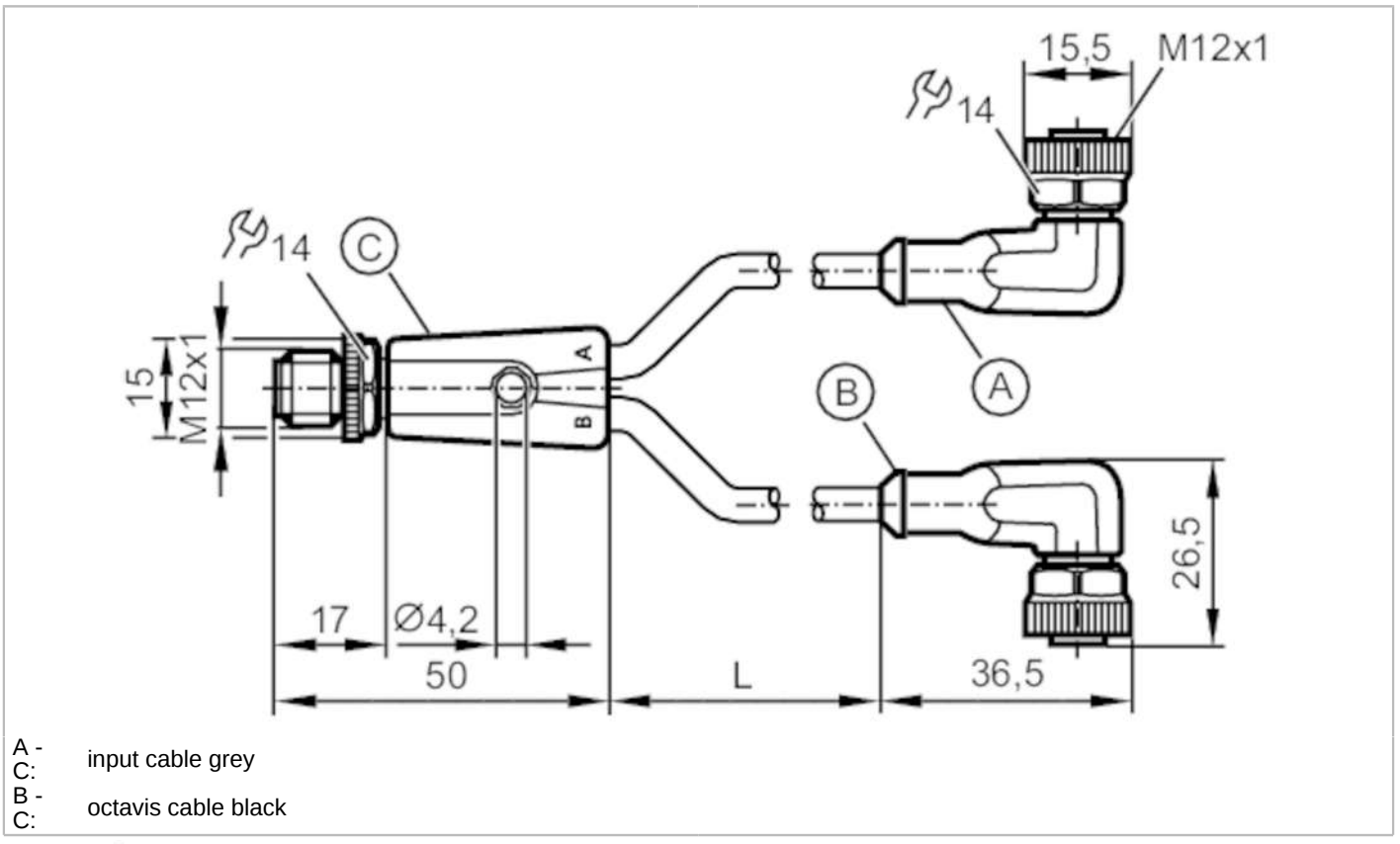

A - C: input cable grey

B - C: octavis cable black

Application		
Special feature		Free from silicone; Halogen-free; Gold-plated contacts; Drag chain suitability
Free from silicone		yes
Electrical data		
Operating voltage	[V]	< 60 AC/DC
Protection class		II
Max. current load total	[A]	4
Operating conditions		
Ambient temperature	[°C]	-25...90
Note on ambient temperature		cULus: ...75
Ambient temperature (moving)	[°C]	-25...90
Note on ambient temperature (moving)		cULus: ...75
Storage temperature	[°C]	-25...55
Storage humidity	[%]	10...100
Other climatic conditions for storage according to stated class		1K22/ DIN 60721-3-1
Protection		IP 65; IP 67; IP 68; IP 69K

EVC620

Y connection cable

YDOAH040MSS0004H04STGH040MSS

Mechanical data			
Weight [g]	267		
Moulded-body material	TPU		
Material nut	brass, nickel-plated		
Sealing material	FKM		
Number of ports splitter box	2		
Drag chain suitability	yes		
Drag chain suitability	bending radius for flexible use	min. 10 x cable diameter	
	travel speed	max. 3.3 m/s for a horizontal travel length of 5 m and max. acceleration of 5 m/s²	
	bending cycles	> 5 Mio.	
	torsional strain	± 180 °/m	

Remarks	
Notes	Please see the technical note under "Downloads"
Pack quantity	1 pcs.

Electrical connection

Cable: 4 m, PUR, Halogen-free, black, Ø 4.3 mm; 4 x 0.34 mm² (42 x Ø 0.1 mm)

Electrical connection - plug

Connector: 1 x M12, straight; coding: A; Moulded body: TPU, orange; Locking: brass, nickel-plated; Contacts: gold-plated;
Tightening torque: 0.6...1.5 Nm

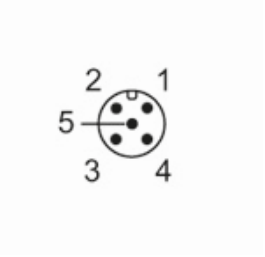

EVC620

Y connection cable

YDOAH040MSS0004H04STGH040MSS

Connection

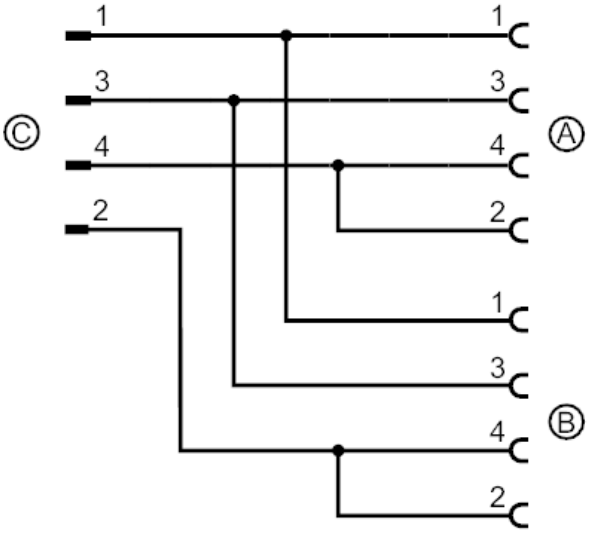

Electrical connection - socket

Connector: 2 x M12, angled; coding: A; Moulded body: TPU, orange; Locking: brass, nickel-plated; Sealing: FKM; Contacts: gold-plated; Tightening torque: 0.6...1.5 Nm

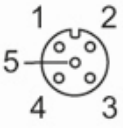

EVC620

Y connection cable

YDOAH040MSS0004H04STGH040MSS

Diagrams and graphs

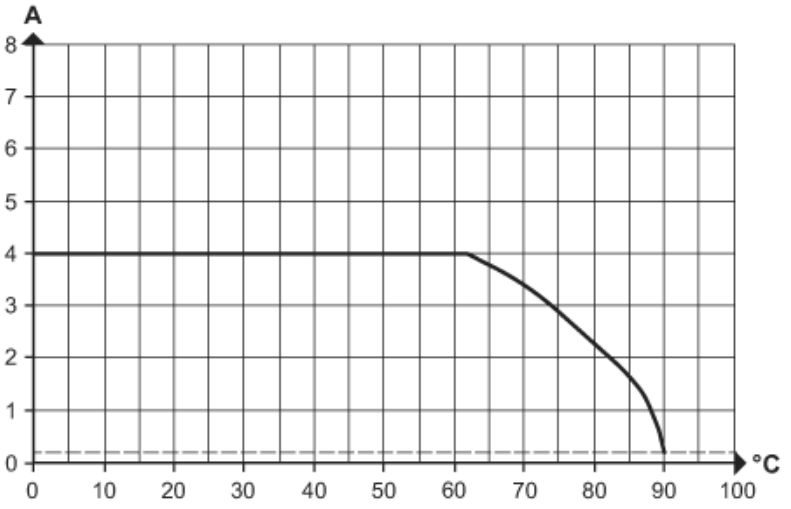

Derating Imax * 0.8 DIN EN 60512-5-2

X Ambient temperature [°C]

Y Current [A]