Part Number: BU-51C
Description: Meter Testing Clip
3907

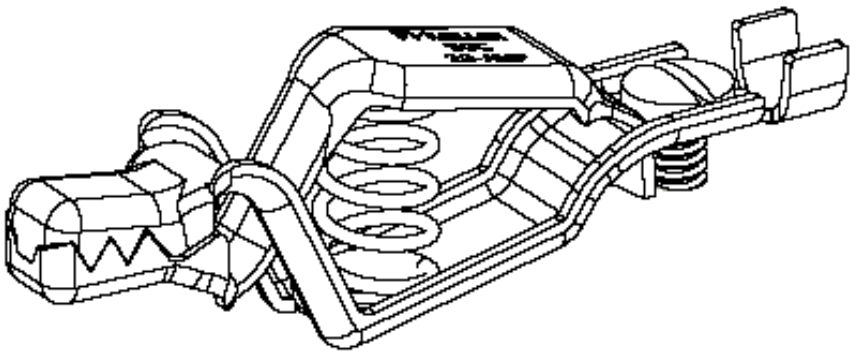

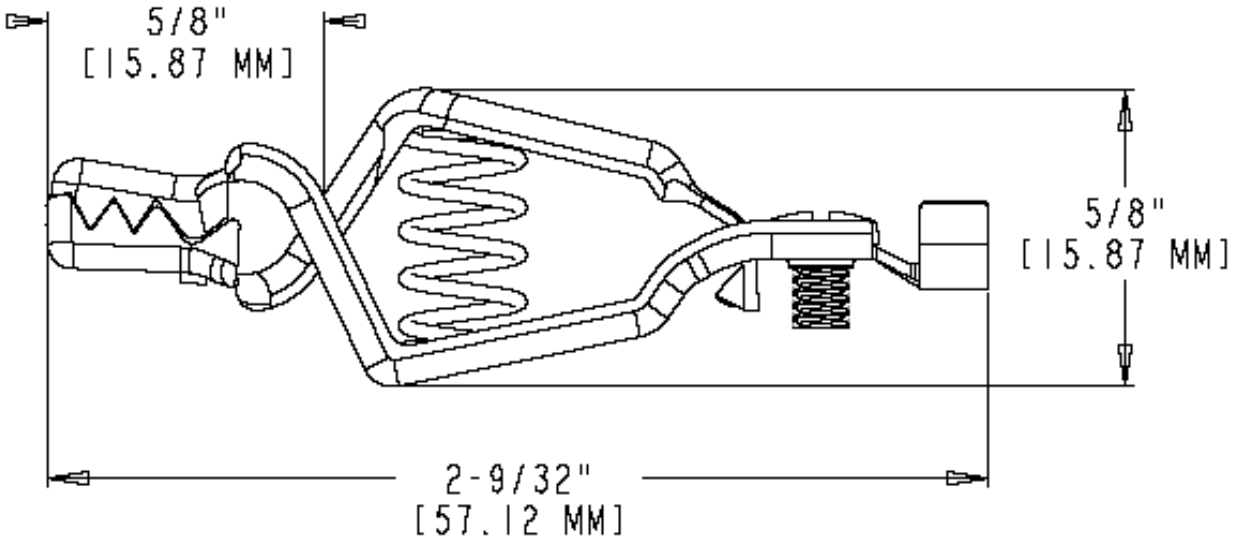

- Meter Testing Clip
- Same as BU-50C except without insulation piercing needle
- Jaw open 0.5” (12.7 mm) max
- Material: Solid copper
- Length: 2.28” (57.12 mm)
- Rating: 20 Amps
- RoHS Compliant

Mueller Electric Company
1625 E. 31st Street
Cleveland, Ohio 44114

ISO 9001:2000
Over 95 Years Of Innovation
www.muellerelectric.com

TEL. 800-955-2629
TEL. 216-771-5225
FAX. 216-771-3068