E-BOX IO-LINK, 1 illuminated pushbutton, momentary contact function, frontring metallic silver, 1 NO, bezel transparent



fields of application

- Measurement-control-regulation
- Mechanical and system engineering
- Construction machinery
- Industrial robots
- Model construction
- Home technology

description

Our IO-LINK products offer you a comfortable start and can be quickly integrated into your existing environment by using standardized M12 connectors. Simply connected and individually parameterized, our control and signaling devices open up countless possibilities. With the IO-LINK versions of the TILTED DIAMOND+ and E-BOX you are already prepared by today for the challenges of tomorrow.

Assembly

- By mounting clip on aluminum profile
- Mounting clip screwable onto other surfaces

Parameterization

- Night mode with different brightness levels
- Flexible color selection: 5 standard colors plus 3 freely selectable RGB color
- 4 different flashing modes
- Can be diagnosed via the controller

More information: **rafi.de/en/io-link/**

Product video E-BOX IO-LINK: **youtube.com/watch**

Product video TILTED DIAMOND+ IO-LINK: **youtube.com/watch**

The information in this data sheet only contains general descriptions and / or performance features, which may not apply precisely as described to the respective application, and which my change due to further product enhancements. The technical data, illustrations and other information about our products are the mere results of individual technical testing. These descriptions and other product features are only binding if they expressly agreed upon at the time of the conclusion of a binding contract. In all other cases, we reserve the right to make technical changes as well as changes of availability. Pictures and other graphic illustrations are approximations only. All product names may be trademarks or brand names of the RAFI Group or any other sub-supplier of RAFI. The use of such by any third parties for their own purposes may infringe the rights of the respective entity holding those rights.

RAFI GmbH & Co. KG

Ravensburger Str. 128-134
88276 Berg / Ravensburg
Germany
www.rafi-group.com,
info.headquarters@rafi-group.com

technical data

general

Actuator position 1	Illuminated pushbutton
Color	light gray
Bezel color	transparent
Property of bezel / mushroom	transparent
Front ring color	metallic silver
Luminous element color	RGB
Collar shape	round
Operating temperature, min.	-30 °C
Operating temperature, max.	60 °C
Storage temperature, min.	-40 °C
Storage temperature, max.	80 °C
illuminated	Yes
Luminous elements	LED
Packaging	Box
Packaging unit	1 pcs.
net weight	114.9 g
Operating life	1,000,000 cycles
Degree of protection, front side, according to DIN EN 60529	IP65
Degree of protection, rear side, according to DIN EN 60529	IP65
Shock resistance according to standard IEC 60068-2-27	50 g at 11 ms amplitude semi-sinusoidal
oscillation restistance according to standard IEC 60068-2-6	5 g at 10...500 Hz
MOQ order	1 pcs.
EMC	DIN EN 61000-6-2 Interference immunity industry DIN EN 61000-6-3 Interference emission living area DIN EN 61131-9 Single-drop digital communication interface (SDCI)
IO-Link version	Interface and System Specification 1.1.2
communication mode IO-Link	COM2 / 38,4 kBaud
cycle time	5 ms
Firmware Update	Yes over IO-Link Master
Pollution degree acc. to DIN EN 61010-1	Pollution degree 2
RoHS compliant	Yes
REACH compliant	Yes

mounting diameters

Outside dimension, length	123.2 mm
Outside dimension, width	40 mm
Outside dimension, height	35.6 mm

mechanical data

Actuation function	momentary contact function

direct links

RAFI eCatalog

The information in this data sheet only contains general descriptions and / or performance features, which may not apply precisely as described to the respective application, and which my change due to further product enhancements. The technical data, illustrations and other information about our products are the mere results of individual technical testing. These descriptions and other product features are only binding if they expressly agreed upon at the time of the conclusion of a binding contract. In all other cases, we reserve the right to make technical changes as well as changes of availability. Pictures and other graphic illustrations are approximations only. All product names may be trademarks or brand names of the RAFI Group or any other sub-supplier of RAFI. The use of such by any third parties for their own purposes may infringe the rights of the respective entity holding those rights.

RAFI GmbH & Co. KG

Ravensburger Str. 128-134
88276 Berg / Ravensburg
Germany
www.rafi-group.com,
info.headquarters@rafi-group.com

Contact function	1 NO
Fixing	Assembly clip
Terminal on the rear	M12 4-pin A-coded
PIN 1	L+
PIN 2	-
PIN 3	L-
PIN 4	C/Q

electrical data

Operating voltage, min.	19.2 V
Operating voltage, max.	28.8 V
Voltage type	DC
Rated operating voltage	24 V
Operating current, max.	100 mA

The information in this data sheet only contains general descriptions and / or performance features, which may not apply precisely as described to the respective application, and which my change due to further product enhancements. The technical data, illustrations and other information about our products are the mere results of individual technical testing. These descriptions and other product features are only binding if they expressly agreed upon at the time of the conclusion of a binding contract. In all other cases, we reserve the right to make technical changes as well as changes of availability. Pictures and other graphic illustrations are approximations only. All product names may be trademarks or brand names of the RAFI Group or any other sub-supplier of RAFI. The use of such by any third parties for their own purposes may infringe the rights of the respective entity holding those rights.

RAFI GmbH & Co. KG

Ravensburger Str. 128-134
88276 Berg / Ravensburg
Germany
www.rafi-group.com,
info.headquarters@rafi-group.com

drawings

Dimensioned drawing

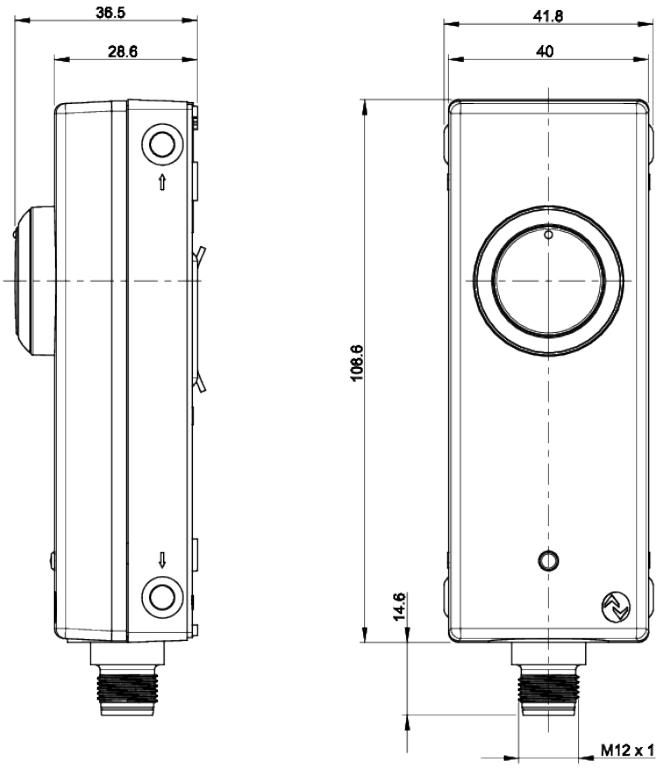

Connection drawing

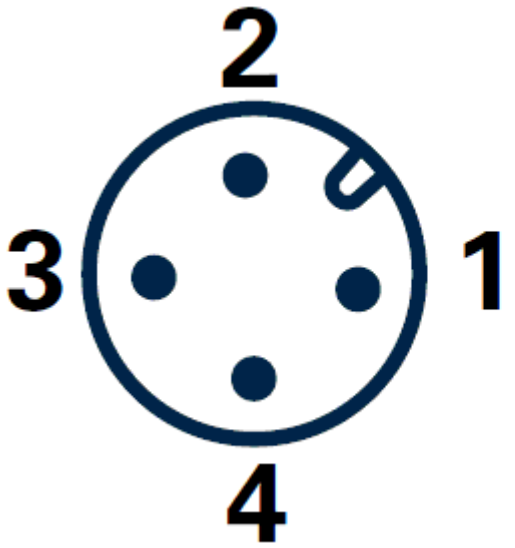

1	L+
2	n.c.
3	L-
4	C/Q

The information in this data sheet only contains general descriptions and / or performance features, which may not apply precisely as described to the respective application, and which my change due to further product enhancements. The technical data, illustrations and other information about our products are the mere results of individual technical testing. These descriptions and other product features are only binding if they expressly agreed upon at the time of the conclusion of a binding contract. In all other cases, we reserve the right to make technical changes as well as changes of availability. Pictures and other graphic illustrations are approximations only. All product names may be trademarks or brand names of the RAFI Group or any other sub-supplier of RAFI. The use of such by any third parties for their own purposes may infringe the rights of the respective entity holding those rights.

RAFI GmbH & Co. KG

Ravensburger Str. 128-134
88276 Berg / Ravensburg
Germany
www.rafi-group.com,
info.headquarters@rafi-group.com