Deep groove ball bearings

6307-2RSR (Series 63..-2RSR)

main dimensions to DIN 625-1, lip seals on both sides

The datasheet is only an overview of dimensions and basic load ratings of the selected product. Please always observe all the guidelines in these overview pages. Further information is given on many products under the menu item "Description". You can also order comprehensive information via the Catalogue selection system (http://www.fag.de/content.fag.de/en/mediathek/library/library.jsp) or by telephone on +49 (91 32) 82 - 28 97.

d	35	mm	
D	80	mm	
B	21	mm	
d_1	49,3	mm	
D_2	67,6	mm	
$D_{a\ max}$	71	mm	
$d_{a\ min}$	44	mm	
$r_{a\ max}$	1,5	mm	
r_{min}	1,5	mm	
m	0,483	kg	Mass
C_r	35500	N	Basic dynamic load rating, radial
C_{0r}	19200	N	Basic static load rating, radial
n_G	5400	1/min	Limiting speed
C_{ur}	1290	N	Fatigue limit load, radial

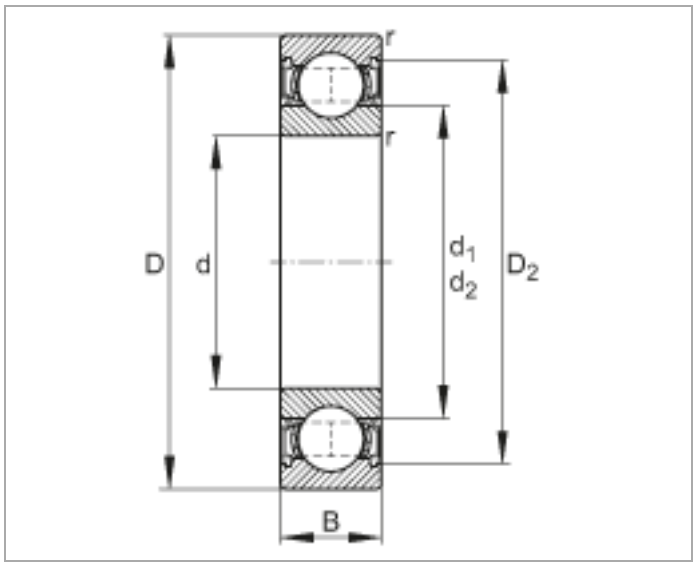
r
r
D
d
d1
d2
D2
B

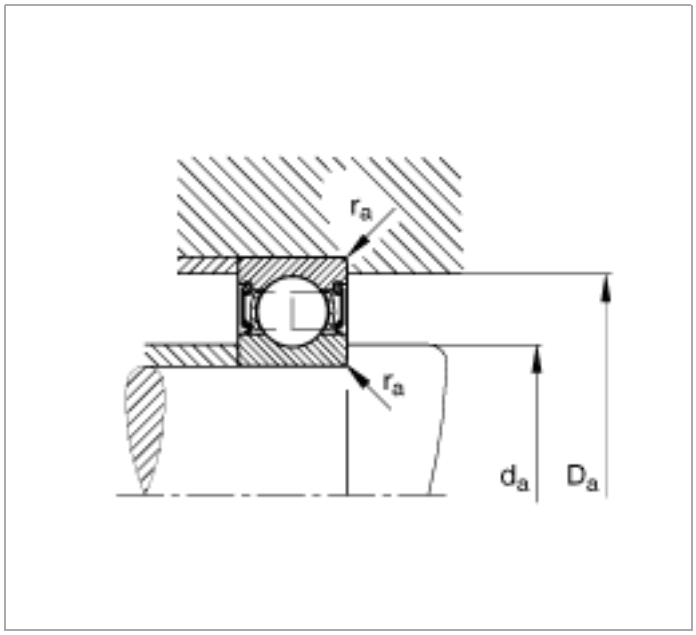
ra
ra
da
Da