iVu Series$_{TG}$ Image Sensor

Datasheet

Overview of the Sensor





The iVu Series Image Sensor is used to monitor parts for type, size, orientation, shape, and location. The package consists of lighting, sensor, lens, and display. Appropriate cables and mounting brackets can be ordered for each application. Additionally, other lenses, brackets, filters and external lights are available. Installation, setup and configuration can be done quickly without requiring a PC to configure the sensor.

Features

- Three sensors in one package—a match sensor that determines whether a pattern on a label or part matches some reference pattern; an area sensor that detects whether a particular feature (or features) is present or not; and an area sensor with tools that adjust for motion
- No external PC required to configure the sensor
- USB 2.0 compliant host provided for easy updating and diagnostics
- Special image processing expertise is not required
- Integrated color touch screen display
- High speed processing

Models

Ring Light Options	Lens Options				Output Type
	8 mm	12 mm	16 mm	25 mm	
None	**IVUTGNX08**	**IVUTGNX12**	**IVUTGNX16**	**IVUTGNX25**	NPN
	IVUTGPX08	**IVUTGPX12**	**IVUTGPX16**	**IVUTGPX25**	PNP
Red	**IVUTGNR08**	**IVUTGNR12**	**IVUTGNR16**	**IVUTGNR25**	NPN
	IVUTGPR08	**IVUTGPR12**	**IVUTGPR16**	**IVUTGPR25**	PNP
Blue	**IVUTGNB08**	**IVUTGNB12**	**IVUTGNB16**	**IVUTGNB25**	NPN
	IVUTGPB08	**IVUTGPB12**	**IVUTGPB16**	**IVUTGPB25**	PNP
Green	**IVUTGNG08**	**IVUTGNG12**	**IVUTGNG16**	**IVUTGNG25**	NPN
	IVUTGPG08	**IVUTGPG12**	**IVUTGPG16**	**IVUTGPG25**	PNP
IR	**IVUTGNI08**	**IVUTGNI12**	**IVUTGNI16**	**IVUTGNI25**	NPN
	IVUTGPI08	**IVUTGPI12**	**IVUTGPI16**	**IVUTGPI25**	PNP

0 143370 4

Courtesy of Steven Engineering, Inc.-230 Ryan Way, South San Francisco, CA 94080-6370-Main Office: (650) 588-9200-Outside Local Area: (800) 258-9200-www.stevenengineering.com

Sensor Specifications

Feature	Description
Power Connection	8-pin Euro-style (M12) male connector; accessory cable required for operation (see (*Power Cables* on page 4).
USB 2.0 Host	8-pin Euro-style (M12) female connector; optional USB cable required for operation of USB Thumb Drive (see *USB Cables* on page 5).
Power Requirements	**Voltage:** 10-30V dc **Current:** 500 mA maximum (exclusive of I/O load)
Output Configuration	NPN or PNP determined by model
Tools	Match, Area, Area with Motion
Demo Mode	Full tool functionality on canned images
Sensor Lock	Optional password protection
External Strobe Output	+ 5V dc
Integrated Ring Light	Red, NIR, Green, Blue
Output Rating	150 mA
Display	68.5 mm (2.7") LCD Color Integrated Display 320 X 240 Transreflective
Acquisition	**Frames Per Second:** 100 max.
Exposure Time	0.1 to 1.049 s
Imager	1/3 inch CMOS 752 X 480 pixels; adjustable Field of View (FOV)
Lens Mount	M12 X 1 mm thread; micro video lens
Construction	Black Valox™ sensor housing; acrylic window **Weight:** Approximately .295 kg (10.4 oz.)
Environmental Rating	IP67
Operating Conditions	**Stable Ambient Temperature:** 0° to + 50° C (+32° to + 122° F) **Relative Humidity:** 95%, max. relative, non-condensing
Certifications	CE

Courtesy of Steven Engineering, Inc.-230 Ryan Way, South San Francisco, CA 94080-6370-Main Office: (650) 588-9200-Outside Local Area: (800) 258-9200-www.stevenengineering.com

Dimensions

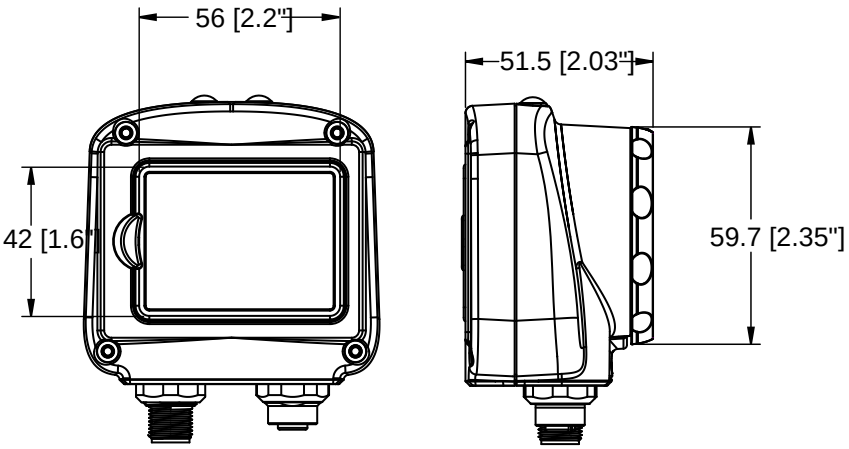

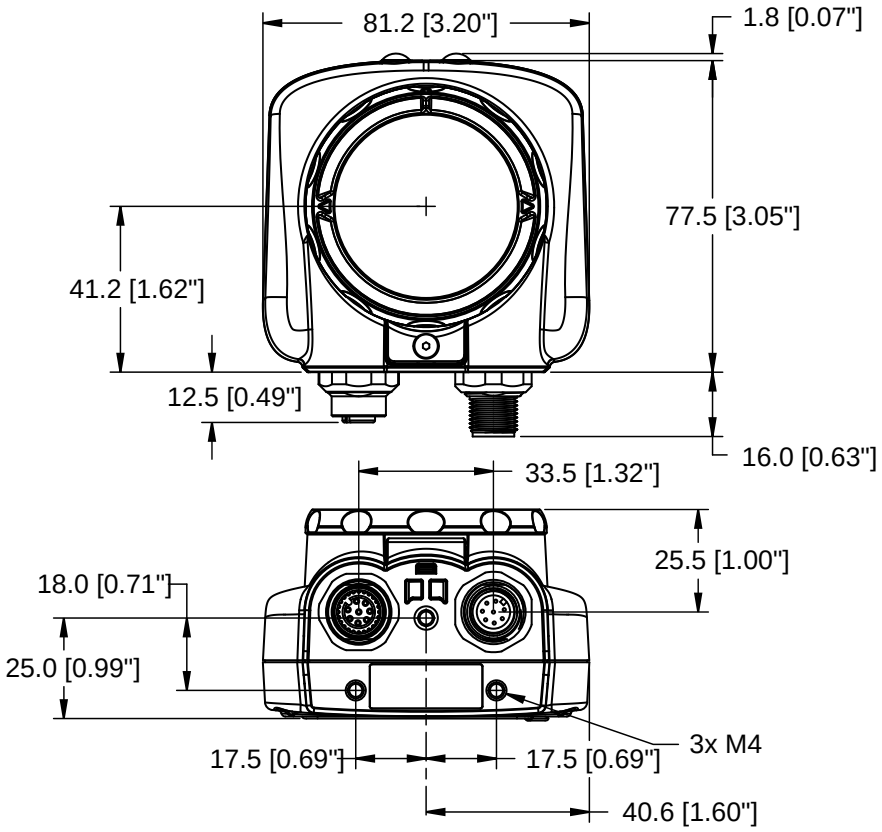

Courtesy of Steven Engineering, Inc.-230 Ryan Way, South San Francisco, CA 94080-6370-Main Office: (650) 588-9200-Outside Local Area: (800) 258-9200-www.stevenengineering.com

Cable Connections

The power and I/O cable for the iVu Series sensor is available in 2, 5, 9, and 15 m (6, 15, 30, 50') lengths. The 8-pin connector on the sensor is shown below (**B**). See the table below for details.



Pin #	Wire Color	Description	Direction
2	Brown	10-30V dc	Input
7	Blue	Common (Signal Ground)	Input
6	Pink	External Trigger	Input
5	Gray	Remote Teach	Input
1	White	Pass/Fail	Output
8	Red	Ready	Output
4	Yellow	Strobe Out (5V dc only)	Output
3	Green	*Reserved*	Output (Do not connect)

Power Cables

Model	Length	Description
MQDC2S-806	2 m (6')	8-pin cable, straight
MQDC2S-815	5 m (15')	
MQDC2S-830	9 m (30')	
MQDC2S-850	15 m (50')	
MQDC2S-806RA	2 m (6')	8-pin cable, right angle
MQDC2S-815RA	5 m (15')	
MQDC2S-830RA	9 m (30')	
MQDC2S-850RA	15 m (50')	

Courtesy of Steven Engineering, Inc.-230 Ryan Way, South San Francisco, CA 94080-6370-Main Office: (650) 588-9200-Outside Local Area: (800) 258-9200-www.stevenengineering.com

USB Cables

Model	Length	Description
MQDEC-8005-USB	.15 m (6")	USB cable, straight
MQDEC-801-USB	.30 m (1')	
MQDEC-803-USB	.90 m (3')	
MQDEC-810-USB	3 m (10')	
MQDEC-8005RA-USB	.15 m (6")	USB cable, right angle
MQDEC-801RA-USB	.30 m (1')	
MQDEC-803RA-USB	.90 m (3')	
MQDEC-810RA-USB	3 m (10')	

Lenses

Model	Lens Description
LMF08	8 mm lens
LMF12	12 mm lens
LMF16	16 mm lens
LMF25	25 mm lens

Filters

Model	Description
FLTMR	Red filter kit
FLTMB	Blue filter kit
FLTMG	Green filter kit
FLTMI	IR Filter kit

Courtesy of Steven Engineering, Inc.-230 Ryan Way, South San Francisco, CA 94080-6370-Main Office: (650) 588-9200-Outside Local Area: (800) 258-9200-www.stevenengineering.com

Brackets

Model	Description	Mounting Bracket
SMBIVURAL	Right angle, left mounting bracket	
SMBIVURAR	Right angle, right mounting bracket	
SMBIVUB	Bottom mounting bracket kit	
SMBIVUU	U-shape mounting bracket kit (includes SMBIVUB)	

more sensors, more solutions

Warranty: Banner Engineering Corp. will repair or replace, free of charge, any product of its manufacture found to be defective at the time it is returned to the factory during the warranty period. This warranty does not cover damage or liability for the improper application of Banner products. This warranty is in lieu of any other warranty either expressed or implied.

Courtesy of Steven Engineering, Inc.-230 Ryan Way, South San Francisco, CA 94080-6370-Main Office: (650) 588-9200-Outside Local Area: (800) 258-9200-www.stevenengineering.com