THERMOMETRICS
A COMMITMENT TO EXCELLENCE

JS8741
Integrated Pipe Clip Surface Temperature Sensor



Thermometrics JS8741 Integrated Pipe Clip Surface Temperature Sensor is a clip-on temperature sensor that monitors the temperature of a fluid or gas that passes through a pipe or tubing circulation system. A system control module receives this temperature reading and uses a control loop to control the overall system temperature. This could be engine temperature, heater temperature, industrial or process supply line temperature, etc.

Applications

- Engine Coolant Temperature
- Battery Pack Coolant Line Temperature
- Process Flow Management
- HVAC Water and Refrigeration
- Home Appliances

Features

- Easy to mount spring-loaded clip of galvanized spring steel
- High sensitivity
- Compact design
- Integrated connector with locking mechanism
- VW75174 approved connector system
- IP57 Ingression Protection Rating

Amphenol
Advanced Sensors

JS8741 Specifications

Operating Temperature

-40°C to 85°C

Storage Temperature

-40°C to 85°C

R @ 25°C

JS8741A: 2.7kΩ ±5%
JS8741B: 10.0kΩ ±5%
JS8741C: 30.0kΩ ±5%

Beta (25/85)°C

3977K

Response Time

~20 seconds mounted on a metallic pipe

Housing Material

Polyamide 6
Color: Grey

Clip Material

Galvanized Steel

Weight

10g

Mating Connector

Amphenol FEP - 428 313 000

TE Connectivity (TE) 1-1718643-1

Homologations

ISO 16750

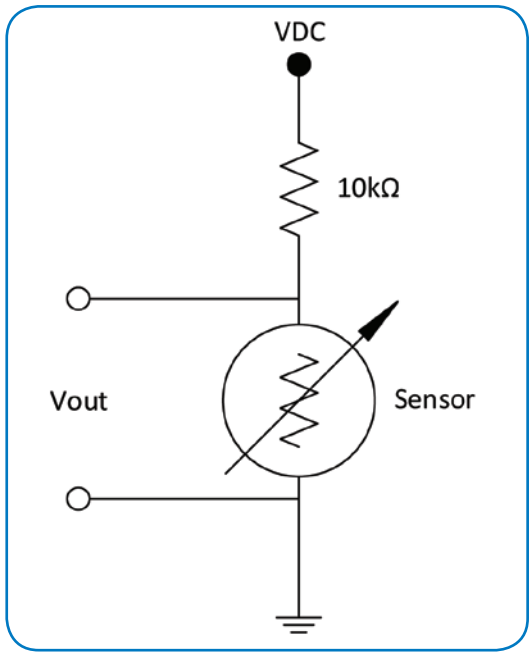

Typical Circuit Diagram

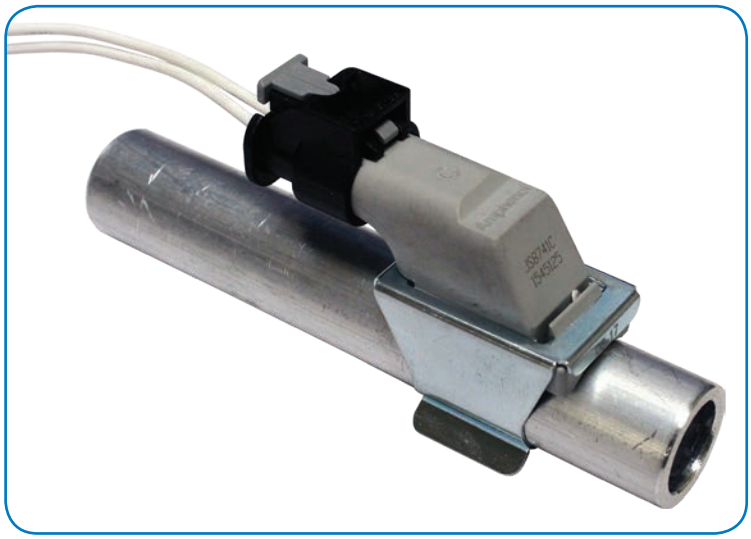

Typical Application

JS8741 Specifications (Continued)

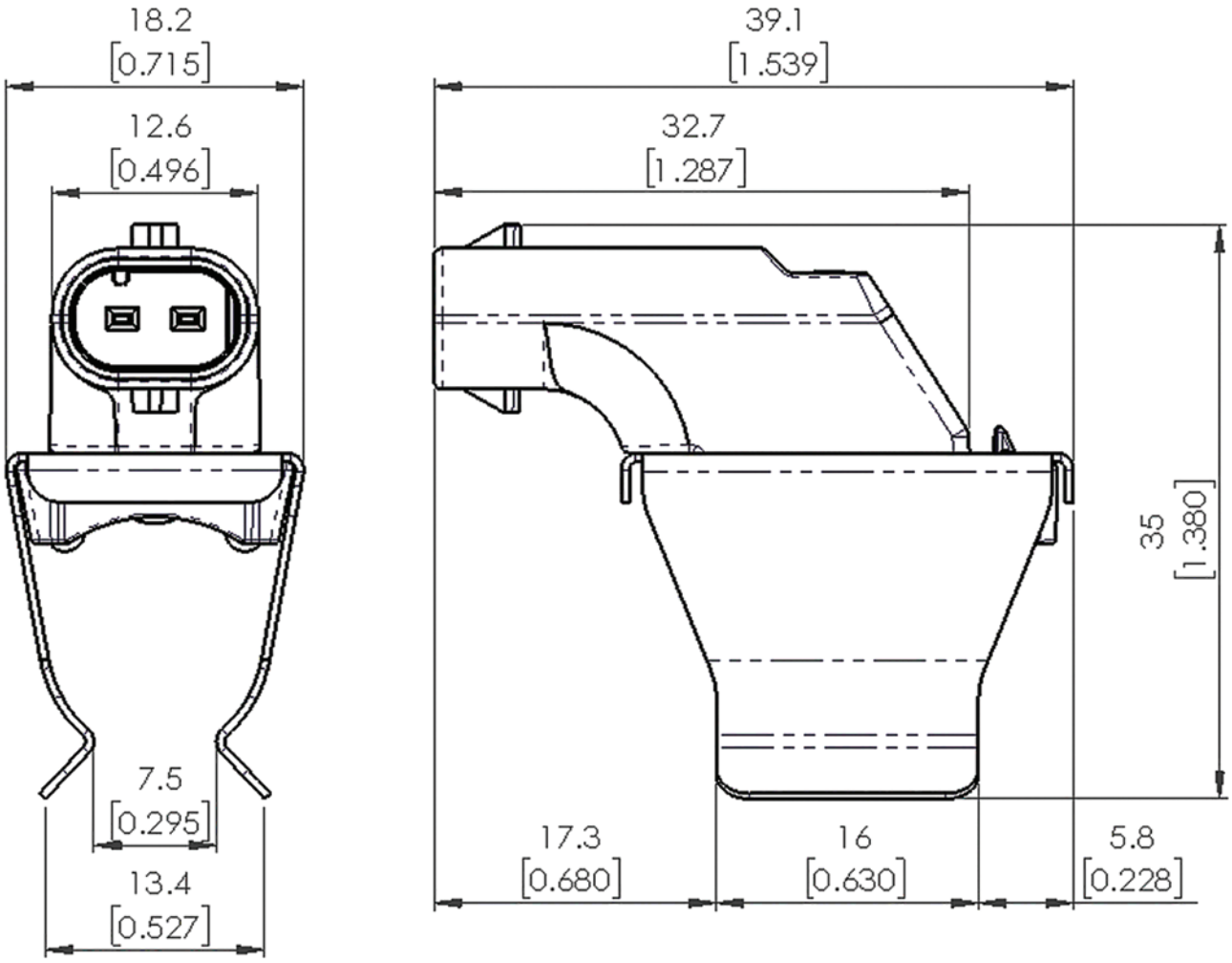

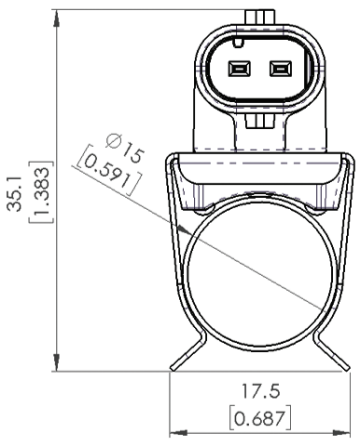

Installed on 15.0mm pipe

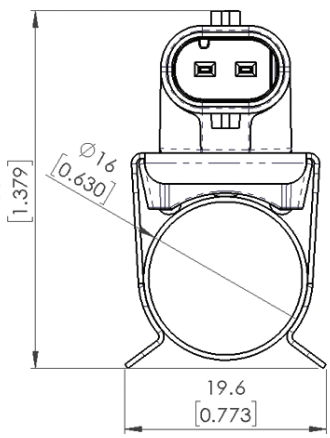

Installed on 16.0mm pipe

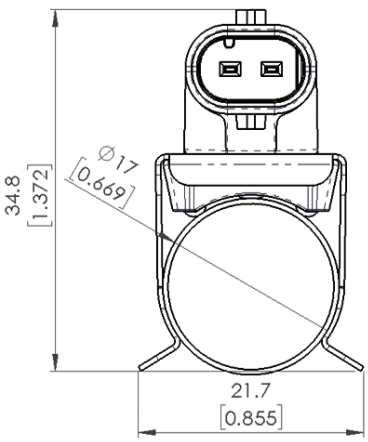

Installed on 17.0mm pipe

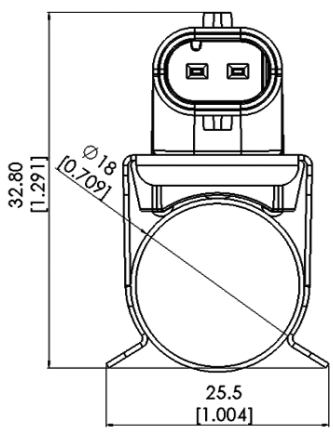

Installed on 18.0mm pipe

Dimensions are in mm [IN]

Dimensions shown are for envelope size. Contact Product Engineering for detailed drawings.

JS8741 Ordering Options

Part Number	Resistance @ 25°C
JS8741A	2.7kΩ ±5%
JS8741B	10.0kΩ ±5%
JS8741C	30.0kΩ ±5%

*Customized resistance versus temperature is possible.

Amphenol

Advanced Sensors

www.amphenol-sensors.com

© 2019 Amphenol Corporation. All Rights Reserved. Specifications are subject to change without notice.
Other company names and product names used in this document are the registered trademarks or trademarks of their respective owners.

AAS-920-700D - 10/2019