TA35 Rocker 2Pole

Circuit Breaker for Equipment thermal and thermal-magnetic, Rocker actuation, 2 pole



Non-illuminated
black
with magnet module



illuminated
Green transparent
White, lettered



Non-illuminated
white

See below:
Approvals and Compliances

Description

- Circuit breaker thermal and thermal-magnetic
- 2-pole
- Snap-in version
- Positively trip-free release
- Method of operation acc. to IEC: S-type
- Different rocker colours
- Wide current range

Unique Selling Proposition

- Magnetic Release for short-circuit protection
- Finely graded rated currents
- High configurability (rocker colours, lettering, illumination)
- IP65 with optional cover

Applications

- Power tools
- Medical and laboratory equipment
- Industrial appliances
- Equipment for construction
- Cleaning equipment
- Commercial and household kitchen appliances
- Industrial Power
- Industrial lighting arrays

Other versions on request

- White front cover

Weblinks

pdf data sheet, html datasheet, General Product Information, Distributor-Stock-Check, Detailed request for product, Product News

Technical Data

Rated Voltage AC	IEC: 240 VAC UL/CSA : 277 VAC
Rated Voltage DC	60 VDC
Rated current range AC	0.05 - 20 A / Magnetic up to 16 A
Conditional short circuit capacity Inc	IEC 60934: 0.05...20 A: 2 kA, SC (C1) @ 240 VAC
Degree of Protection	front side IP40 acc. to IEC 60529
Dielectric Strength	50 Hz: > 2.5 kV Impulse 1.2/50 µs: > 4 kV
Insulation Resistance	500 VDC > 100 MΩ
Lifetime	mechanical: 50'000 switching cycles
	AC: 1 x Ir, cos φ 0.6: 50'000 switching cycles
	DC: 1 x Ir, L/R = 2 - 3 ms: 50'000 switching cycles

Overload	IEC: min. 40 trips @ 6 x Ir, cos φ 0.6
	UL / CSA: min. 50 trips @ 1.5 x Ir, cos φ 0.75
Allowable Operation Temp.	-30 °C to 60 °C
Storage Temperature	-40 °C to 60 °C
Vibration Resistance	± 0.75 mm @ 10 - 60 Hz acc. to IEC 60068-2-6, test Tc 10 G @ 60 - 500 Hz acc. to IEC 60068-2-6, test Tc
Shock Resistance	30 G / 18 ms acc. to IEC 60068-2-27, test Ea
Tripping Type	Thermal
Possible Tripping Types	Thermal-Magnetic
Actuation Type	Rocker
Weight	32 g - magnetic 56 g

Approvals and Compliances

Detailed information on product approvals, code requirements, usage instructions and detailed test conditions can be looked up in Details about Approvals

SCHURTER products are designed for use in industrial environments. They have approvals from independent testing bodies according to national and international standards. Products with specific characteristics and requirements such as required in the automotive sector according to IATF 16949, medical technology according to ISO 13485 or in the aerospace industry can be offered exclusively with customer-specific, individual agreements by SCHURTER.

Approvals

The approval mark is used by the testing authorities to certify compliance with the safety requirements placed on electronic products.

Approval Reference Type: TA35

Approval Logo	Certificates	Certification Body	Description
	VDE Approvals	VDE	VDE Certificate Number: 40019754
	UL Approvals	UL	UR File Number: E71572
	CCC Approvals	CCC	CCC Certificate Number: 2024010307676639

Product standards

Product standards that are referenced

Organization	Design	Standard	Description
	Designed according to	IEC 60934	Circuit-breakers for equipment (CBE)
	Designed according to	UL 1077	Standard for Supplementary Protectors for Use in Electrical Equipment
	Designed according to	CSA C22.2 No. 235	Supplementary Protectors
	Designed according to	GB 17701	Circuit-breaker for equipment

Application standards

Application standards where the product can be used

Organization	Design	Standard	Description
	Suitable for applications acc.	IEC/UL 62368-1	Audio/video, information and communication technology equipment - Part 1: Safety requirements

Compliances

The product complies with following Guide Lines

Identification	Details	Initiator	Description
	CE declaration of conformity	SCHURTER AG	The CE marking declares that the product complies with the applicable requirements laid down in the harmonisation of Community legislation on its affixing in accordance with EU Regulation 765/2008.
	UKCA declaration of conformity	SCHURTER AG	The UKCA marking declares that the product complies with the applicable requirements laid down in the British Amendment of Regulation (EC) 765/2008.
	RoHS	SCHURTER AG	Directive RoHS 2011/65/EU, Amendment (EU) 2015/863
	China RoHS	SCHURTER AG	The law SJ / T 11363-2006 (China RoHS) has been in force since 1 March 2007. It is similar to the EU directive RoHS.
	REACH	SCHURTER AG	On 1 June 2007, Regulation (EC) No 1907/2006 on the Registration, Evaluation, Authorization and Restriction of Chemicals 1 (abbreviated as "REACH") entered into force.

Dimension [mm]

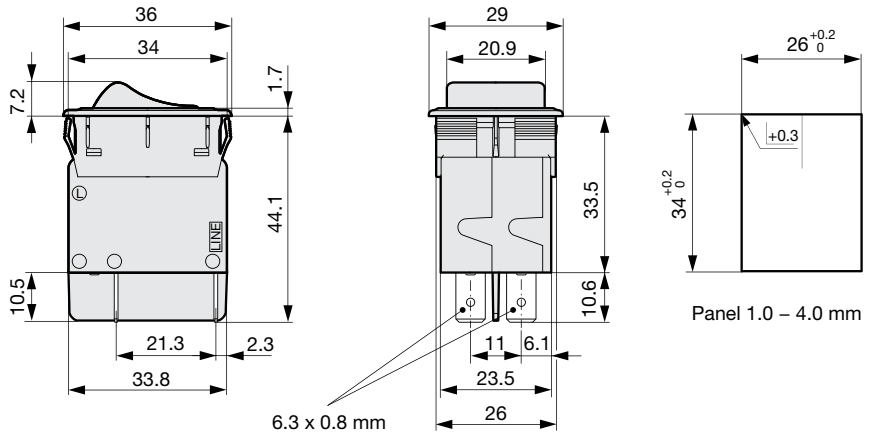

TA35 without protection cover

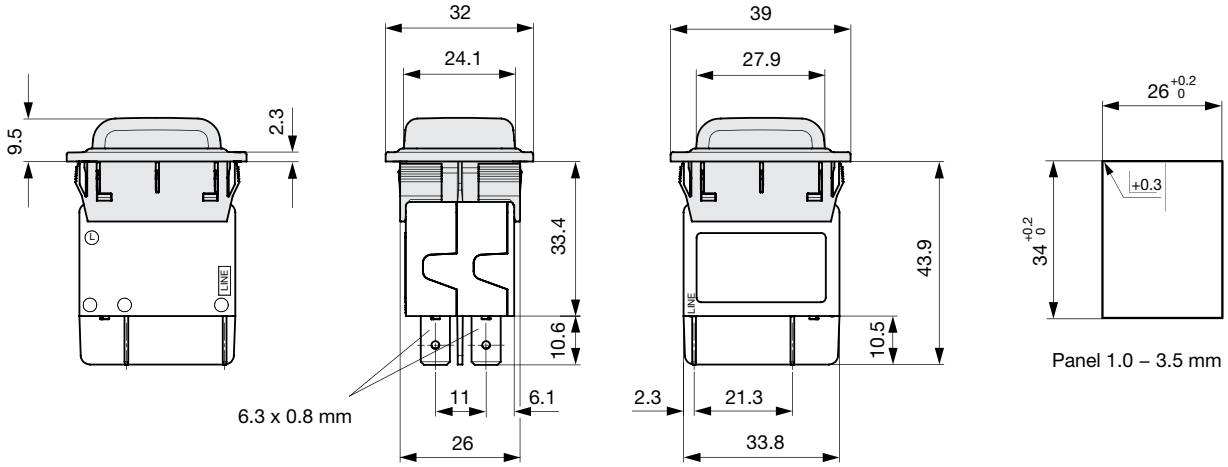

TA35 with factory mounted transparent protection cover CZM21, IP65

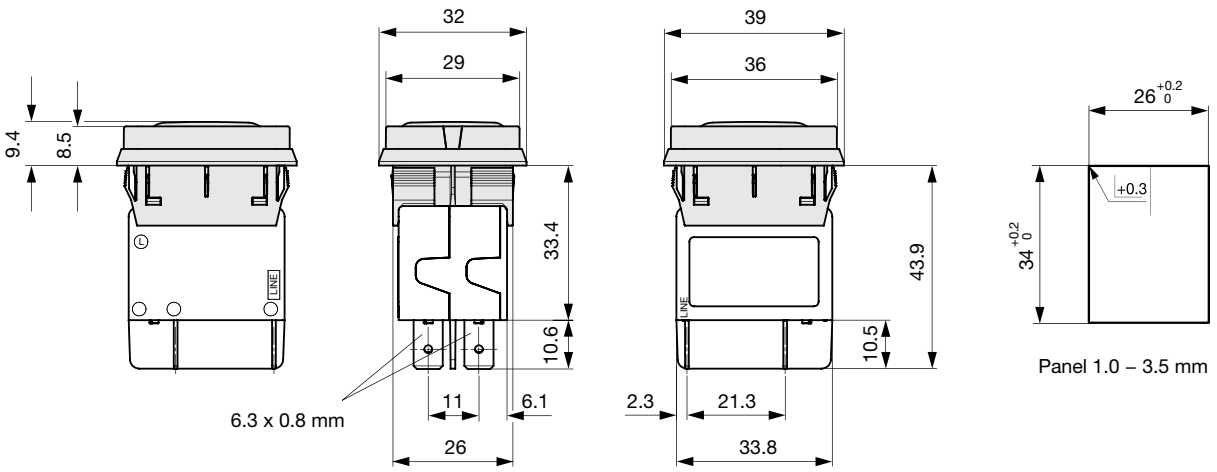

TA35 with factory mounted transparent protection cover and raised collar CZM23, IP65

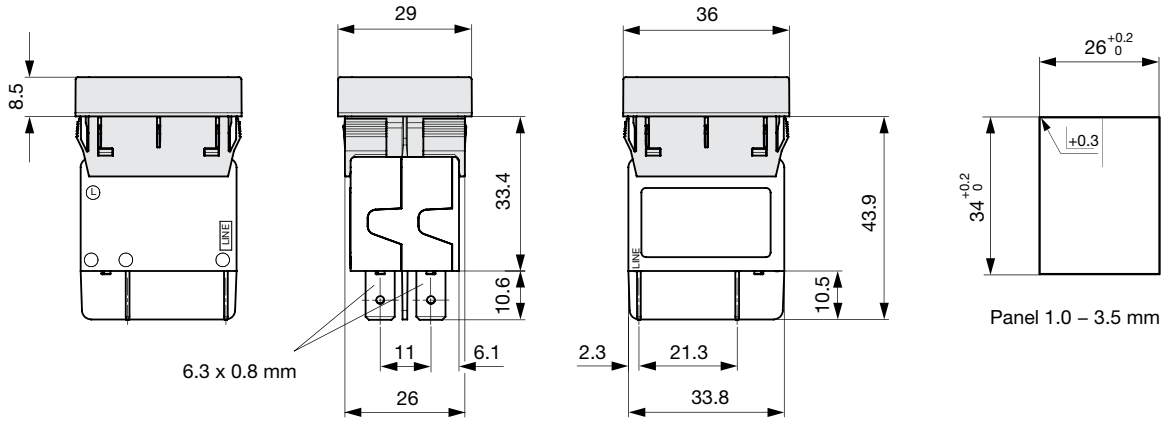

TA35 with factory mounted raised collar CZM24, IP40

TA35 Rocker 2Pole

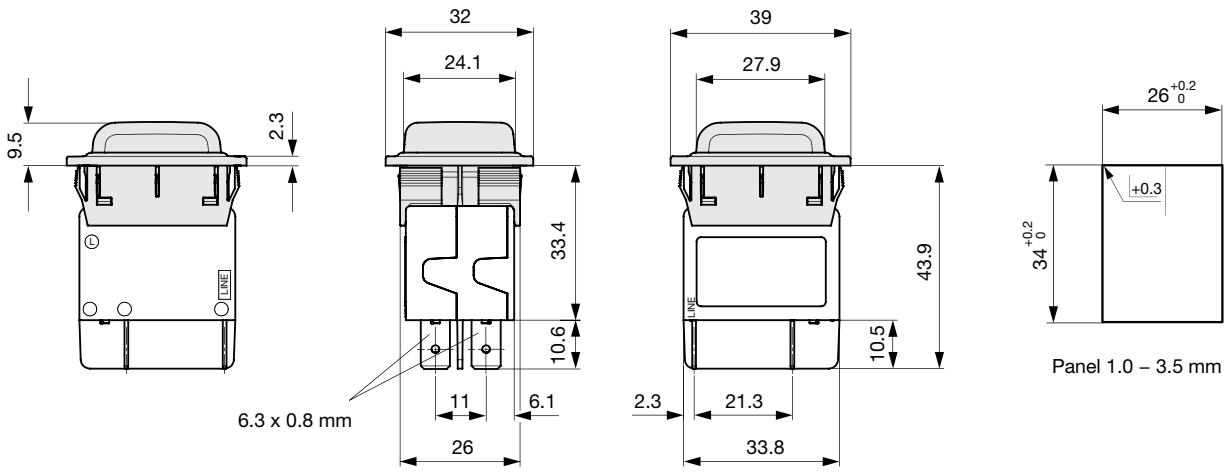

TA35 with factory mounted transparent antibacterial protection cover CZM25, IP65

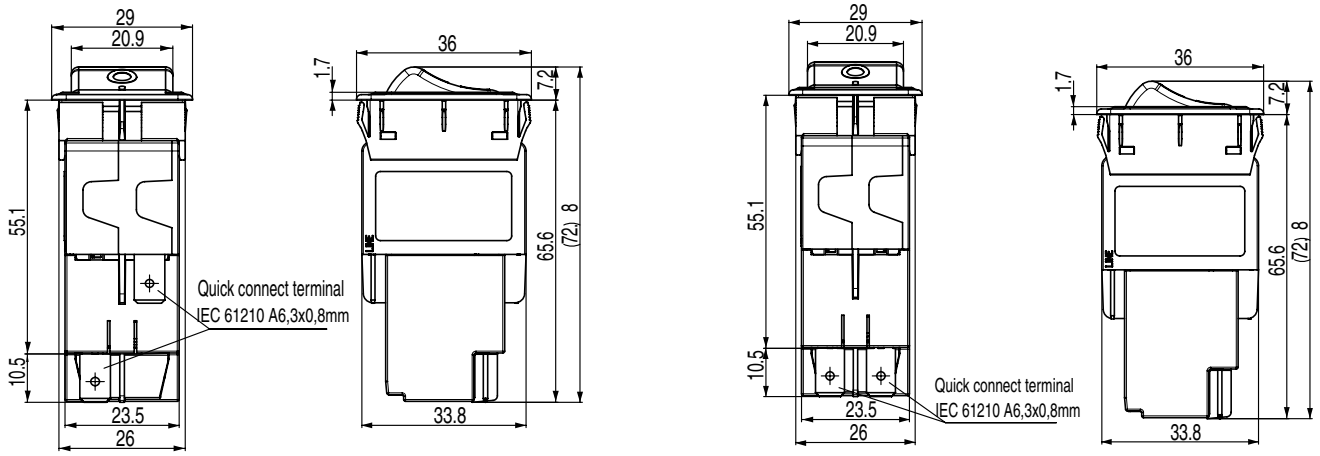

TA35 1- and 2-pole protected

Diagrams

1-pole thermal protected, illuminated

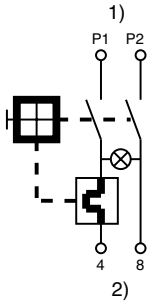

1) Line, 2) Load
Codepos AAA = C12, C14, C17, C18, C19

1-pole thermal protected, non illuminated

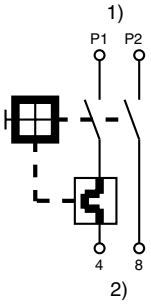

1) Line, 2) Load

2-pole thermal protected, illuminated

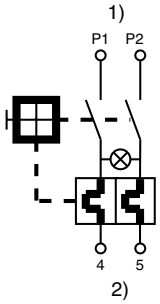

1) Line, 2) Load
Codepos AAA = C32, C34, C37, C38, C39

2-pole thermal protected, non illuminated

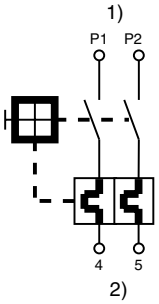

1) Line, 2) Load

1-pole thermal and magnetic protected, illuminated

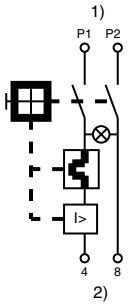

1-pole thermal and magnetic protected, non illuminated

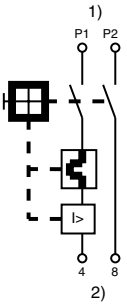

2-pole thermal and magnetic protected, illuminated

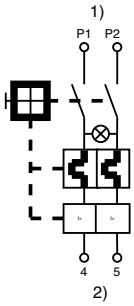

2-pole thermal and magnetic protected, non illuminated

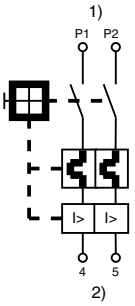

The keys / codepos are listed in the key table of the basic function for selection.

Approval		Rated current	Rated Voltage AC	Rated Voltage DC
	UL 1077	0.05...20 A	277 V	32/60 V
	CSA C22.2 235	0.05...20 A	277 V	32/60 V
	IEC 60934	0.05...20 A	240 V	32/60 V
	GB 17701	0.05...20 A	240 V	60 V

Typical internal resistance per pole

Rated Current [A]	Internal Resistance [Ω]
0.05	200.000
0.1	70.000
0.5	2.750
1.0	0.720
1.5	0.340
2.0	0.187
2.5	0.115
2.8	0.089
3.0	0.059
4.0	0.059
5.0	0.044
6.0	0.028
7.0	0.0142
8.0	0.0142
10.0	0.0109
12.0	0.0086
13.0 *	0.0072
14.0 *	0.0072
15.0 *	0.0056
16.0 *	0.0056
18.0 *	0.0052
20.0 *	0.0052

* 3-Pole max. 12 A

Effect of ambient temperature

The units are calibrated for an ambient temperature of +23°C. To determine the rated current for a lower or higher ambient temperature, use a correction factor (typical value) from the table below:

Ambient Temperature [°C]	Correction factor
-30	0.76
-20	0.81
0	0.90
+23	1.00
+40	1.03
+50	1.04
+60	1.06

Example: Rated current = 5 A, Environmental temperature = 50 °C --> Correction factor = 1.04, Resulting current = 5.2 A --> Round to next higher rated current: 6 A

Time-Current-Curves

Tripping Characteristics thermal I_n < 3 A

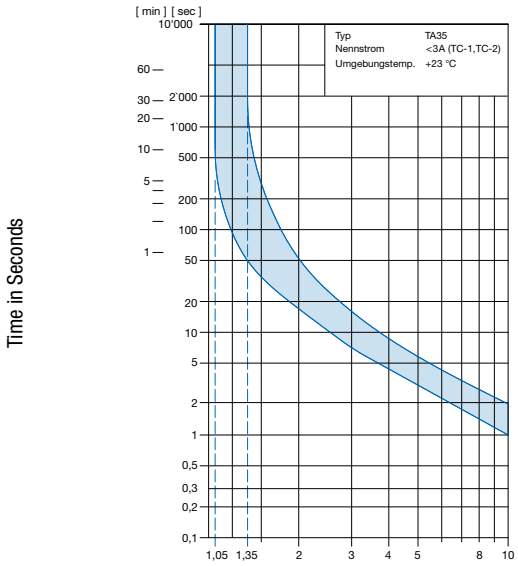

Ambient temperature +23°

Tripping Characteristics thermal In ≥ 3 ... ≤ 15 A

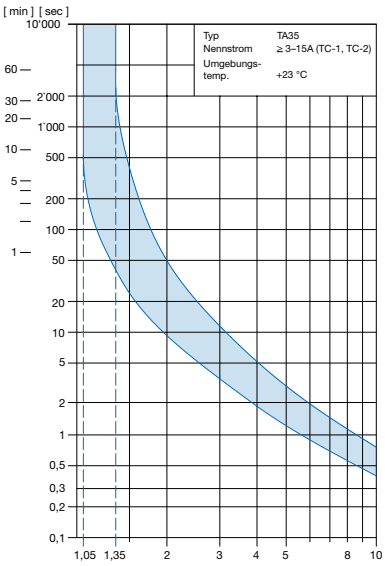

Ambient temperature +23°

Tripping Characteristics thermal magnetic fast acting

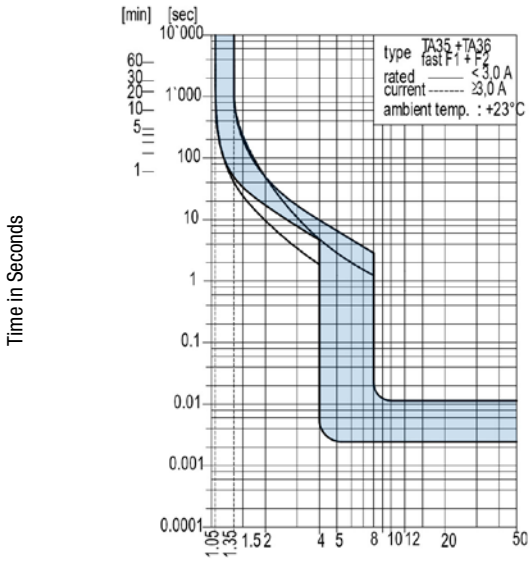

Ambient temperature +23°

Tripping Characteristics thermal magnetic time lag

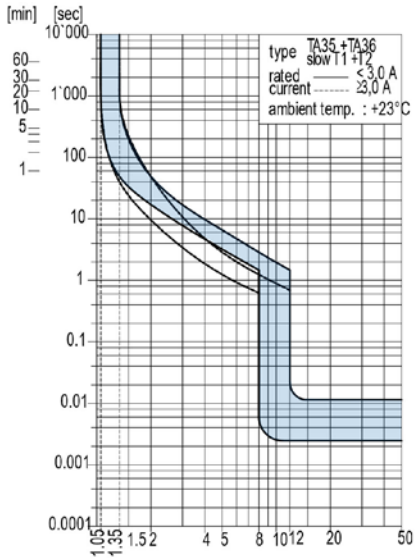

Ambient temperature +23°

Order number key

T	A	3	5	-	C	B	D	W	F	Z	0	5	C	0	-	0	0	0	-	C	Z	M	2	1
					1			2	3		4			5			6				7				

Basic function 1

Poles	1	2		3
Thermal overload protection / Illumination	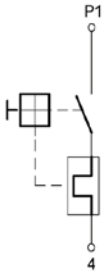	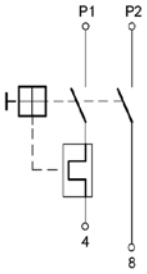	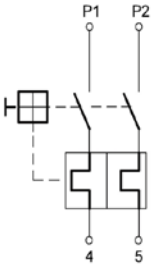	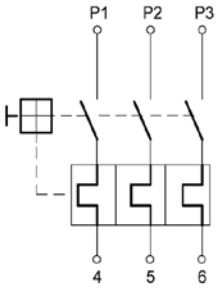
Rocker				
Without illumination	CFT	CBT	CBD	CKD
 380…400 V	-	-	-	CD1
220…240 V	C2F	C12	C32	-
110…120 V	C4F	C14	C34	-
20…26 V	C7F	C17	C37	-
10…13 V	C8F	C18	C38	-
4…7 V	C9F	C19	C39	-
Momentary				
Without illumination	CGT	CET	CED	CLD

** grey highlighted fields: configuration is not offered anymore*

Front- & Actuation color 2

Front Bezel	Rocker without illumination	Rocker with illumination		
black	-	clear transparent	=	1
black	-	red transparent	=	3
black	-	green transparent	=	4
black	-	orange transparent	=	6
black	-	blue transparent	=	7
black	black	-	=	B
black	green	-	=	G
black	red	-	=	R
black	white	-	=	W
black	orange	-	=	X
black	yellow	-	=	Y

T	A	3	5	-	C	B	D	W	F	Z	0	5	C	0	-	0	0	0	-	C	Z	M	2	1
					1			2	3		4			5			6				7				

Rocker legend, marking 3

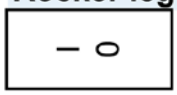	Embossed	=	F
	Printed white	=	H
	Printed black	=	K
	Printed white	=	L
	Printed black	=	M

Rated current [A] 4

Thermal overload protection

In		In		In		In	
0.05 A =	Z05	1.1 A =	J11	3.0 A* =	030	8.0 A* =	080
0.10 A =	J01	1.2 A =	J12	3.2 A =	032	8.5 A =	085
0.15 A =	Z15	1.3 A =	J13	3.5 A =	035	9.0 A =	090
0.20 A =	J02	1.4 A =	J14	3.7 A =	037	10.0 A* =	100
0.25 A =	Z25	1.5 A =	J15	4.0 A* =	040	10.5 A =	105
0.30 A =	J03	1.6 A =	J16	4.2 A =	042	11.0 A =	110
0.35 A =	Z35	1.7 A =	J17	4.5 A =	045	11.5 A =	115
0.40 A =	J04	1.8 A =	J18	4.7 A =	047	12.0 A* =	120
0.45 A =	Z45	1.9 A =	J19	5.0 A* =	050	13.0 A =	130
0.50 A =	J05	2.0 A* =	J20	5.2 A =	052	14.0 A =	140
0.60 A =	J06	2.1 A =	J21	5.5 A =	055	15.0 A* =	150
0.70 A =	J07	2.2 A =	J22	5.7 A =	057	16.0 A* =	160
0.80 A =	J08	2.3 A =	J23	6.0 A* =	060	17.0 A =	170
0.90 A =	J09	2.5 A =	J25	6.5 A =	065	18.0 A =	180
1.00 A* =	J10	2.8 A =	J28	7.0 A =	070	19.0 A =	190
				7.5 A =	075	20.0 A =	200

** Available with magnetic release (additional rated currents on request)*

Characteristic Magnetic Release 5

Standard, no other features	=	C0
1-pole, time lag	=	T1
2-poles, time lag	=	T2
1-pole, fast acting	=	F1
2-poles, fast acting	=	F2

TA35 Rocker 2Pole

T	A	3	5	-	C	B	D	W	F	Z	0	5	C	0	-	0	0	0	-	C	Z	M	2	1
					1			2	3		4			5			6				7				

Special marking		6
Standard	=	000
Special marking (XXX = placehoder)	=	XXX

Accessories, factory-mounted (optional)		7
No accessory	=	(blank)
Transparent protection cover, 2-pole, IP65 	=	CZM21
Transparent protection cover with raised collar, 2-pole, IP65 	=	CZM23
Raised collar, 2-pole, IP40 	=	CZM24
Transparent antibacterial protection cover, 2-pole, IP65 	=	CZM25

Variants

Basic function	Rocker colour	Legend	Rated current	Accessories	Config. Code	Order Number
2-pole, 2 bimetal, without illumination	White	embossed	3.0 A	Without cover	TA35-CBDWF030C0-000	4435.0022
2-pole, 2 bimetal, without illumination	White	black printed	3.0 A	Without cover	TA35-CBDWM030C0-000	4435.0374
2-pole, 2 bimetal, without illumination	Black	white printed	4.0 A	Without cover	TA35-CBDBH040C0-000	4435.0276
2-pole, 2 bimetal, without illumination	White	embossed	5.0 A	Without cover	TA35-CBDWF050C0-000	4435.0039
2-pole, 1 bimetal, without illumination	White	embossed	6.0 A	Without cover	TA35-CBTWF060C0-000	4435.0042
2-pole, 2 bimetal, illuminated 240 V	Green transparent	white printed	6.0 A	Without cover	TA35-C324H060C0-000	4435.0265
2-pole, 1 bimetal, without illumination	White	embossed	8.0 A	Without cover	TA35-CBTWF080C0-000	4435.0046
2-pole, 1 bimetal, without illumination	Black	white printed	8.0 A	Without cover	TA35-CBTBL080C0-000	4435.0067
2-pole, 2 bimetal, illuminated 240 V	Blue transparent	white printed	8.0 A	Transparent cover, IP65	TA35-C327L080C0-000-CZM21	4435.0483
2-pole, 1 bimetal, without illumination	Black	white printed	10.0 A	Without cover	TA35-CBTBL100C0-000	4435.0012
2-pole, 1 bimetal, without illumination	White	embossed	10.0 A	Without cover	TA35-CBTWF100C0-000	4435.0047
2-pole, 2 bimetal, without illumination	White	black printed	10.0 A	Without cover	TA35-CBDWM100C0-000	4435.0091
2-pole, 1 bimetal, illuminated 240 V	Green transparent	embossed	10.0 A	Without cover	TA35-C124F100C0-000	4435.0187
2-pole, 2 bimetal, without illumination	White	embossed	10.0 A	Without cover	TA35-CBDWF100C0-000	4435.0195
2-pole, 2 bimetal, w/o illum., magnetic T2	White	black printed	10.0 A	Without cover	TA35-CBDWM100T2-000	3-150-705
2-pole, 2 bimetal, w/o illum., magnetic F2	White	black printed	10.0 A	Without cover	TA35-CBDWM100F2-000	3-150-706
2-pole, 2 bimetal, without illumination	White	embossed	12.0 A	Without cover	TA35-CBDWF120C0-000	4435.0304
2-pole, 2 bimetal, without illumination	Black	embossed	15.0 A	Without cover	TA35-CBDBF150C0-000	4435.0347
2-pole, 2 bimetal, without illumination	White	black printed	15.0 A	Raised collar with transparent cover, IP65	TA35-CBDWM150C0-000-CZM23	4435.0423
2-pole, 2 bimetal, w/o illum., magnetic F2	White	embossed	16.0 A	Without cover	TA35-CBDWF160F2-000	3-147-647
2-pole, 2 bimetal, illuminated, magnetic F2	Green transparent	embossed	16.0 A	Without cover	TA35-C324F160F2-000	3-150-707
2-pole, 2 bimetal, illuminated, magnetic T2	Green transparent	embossed	16.0 A	Without cover	TA35-C324F160T2-000	3-150-708
2-pole, 1 bimetal, without illumination	White	embossed	20.0 A	Without cover	TA35-CBTWF200C0-000	4435.0002
2-pole, 2 bimetal, without illumination	White	embossed	20.0 A	Without cover	TA35-CBDWF200C0-000	4435.0013
2-pole, 2 bimetal, without illumination	Black	white printed	20.0 A	Without cover	TA35-CBDBL200C0-000	4435.0321

Availability for all products can be searched real-time: https://www.schurter.com/en/info-center/support-tools/stock-check-distributors

Packaging Unit 10 Pcs

Accessories

	Description
	TA35_Accessories Screw-on collar with cover, IP65

06.04.2025

The specifications, descriptions and illustrations indicated in this document are based on current information. All content is subject to modifications and amendments. Information furnished is believed to be accurate and reliable. However, users should independently evaluate the suitability and test each product selected for their own applications.