

With Lever & Spring



With Thumb Lever

Description

These 5 figure stroke counters are especially designed for limited space and high count life applications. The advanced drive system translates into exceptionally high operating speeds, extended operating life, for fast and accurate readings. Ideal for copiers, printing presses, cut-off machines, and piece-part counting applications. Also available with a thumb lever for use as a tally counter.

Features

- Compact size
- Reliability
- Low cost

Options

- Special levers
- 10011-001S - additional spring
- 10007-009S - lever and spring

Specifications

Figures: 5 figures, white on black, 0.19'' [5mm] high
Reset: Standard or large knob, non-reset
Speed: 500 counts/minute
Rotation: Top-coming or top-going
Count Stroke: 40° Min. - 45° Max.

Shaft Extension: Right-hand or left-hand
Shaft Diameter: 0.156'' [4.0mm]
Operating Life: Beyond 5 million counts
Temp. Range: -15°F to +140°F [-25°C to +60°C]
Weight: 2 oz. [57g]

Models	Description	Models	Description
1-4615	Left-hand, top-coming, standard reset knob	2-4615	Left-hand, top-coming, large reset knob
1-4625	Left-hand, top-going, standard reset knob	2-4625	Left-hand, top-going, large reset knob
1-4635	Right-hand, top-coming, standard reset knob	2-4635	Right-hand, top-coming, large reset knob
1-4645	Right-hand, top-going, standard reset knob	2-4645	Right-hand, top-going, large reset knob
1-4635T	Right-hand, top-coming, std. reset knob, with thumb lever	5-4645	Right-hand, top-going, non-reset

* Items in bold are normally in factory stock.

Dimensions

Right - Hand Shaft

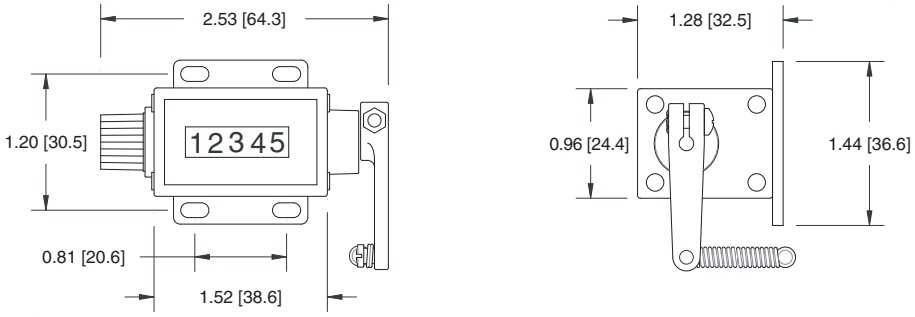

Mounting holes: 0.13'' x 0.24'' [3.3 x 6.1mm] slots

Applications

Copiers



Printing presses



Farm equipment



Piece-part counting



Cut-off machines

