ISSUE DATE: 06/17/2014

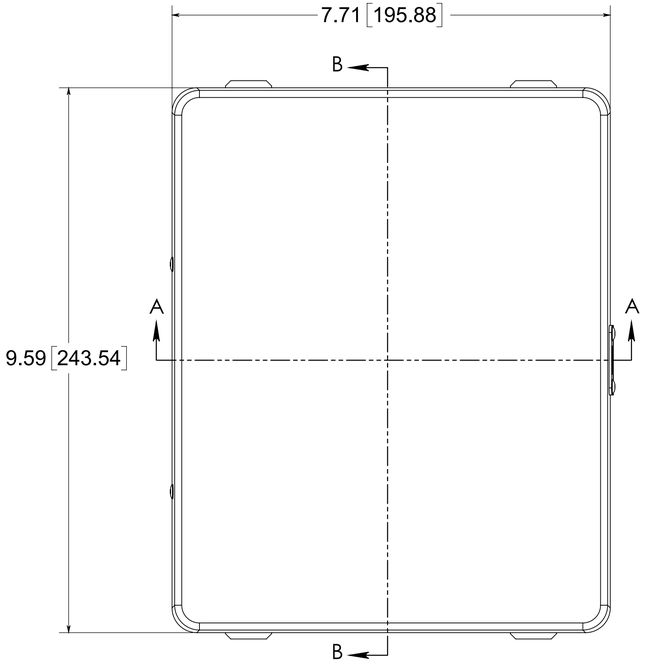

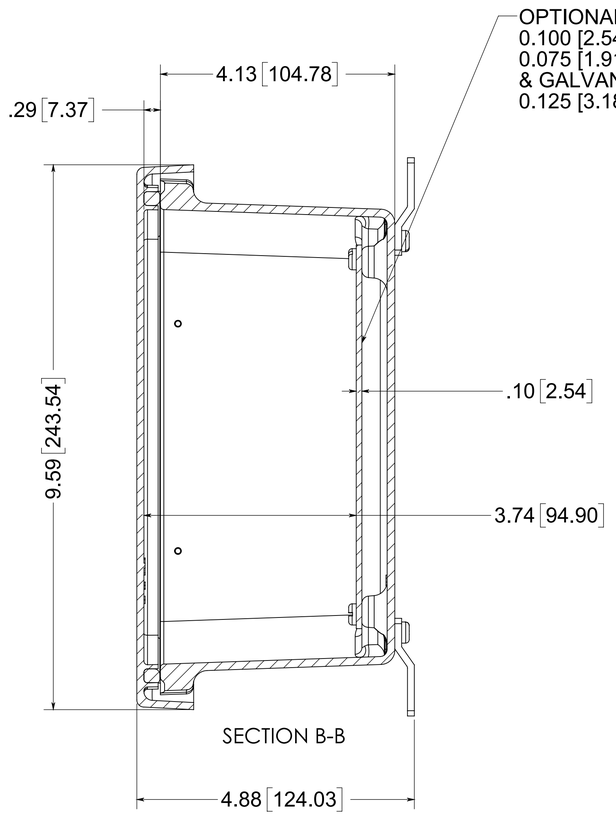

SECTION B-B

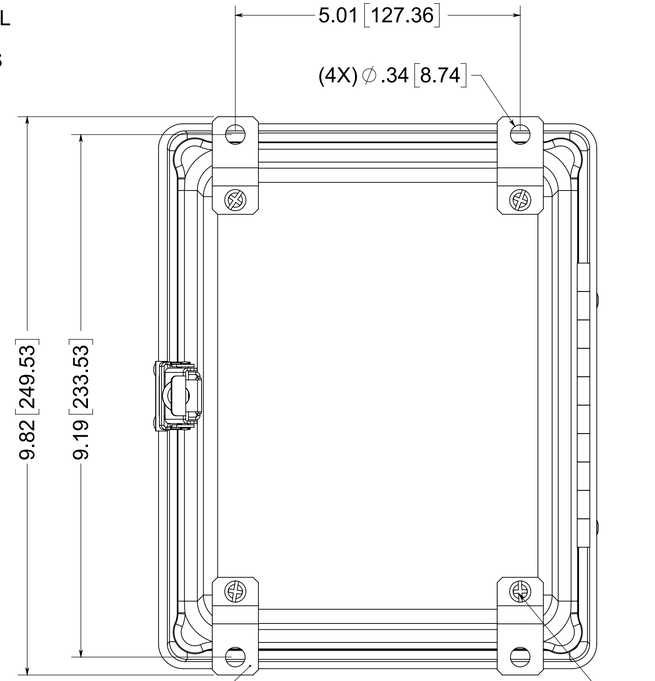

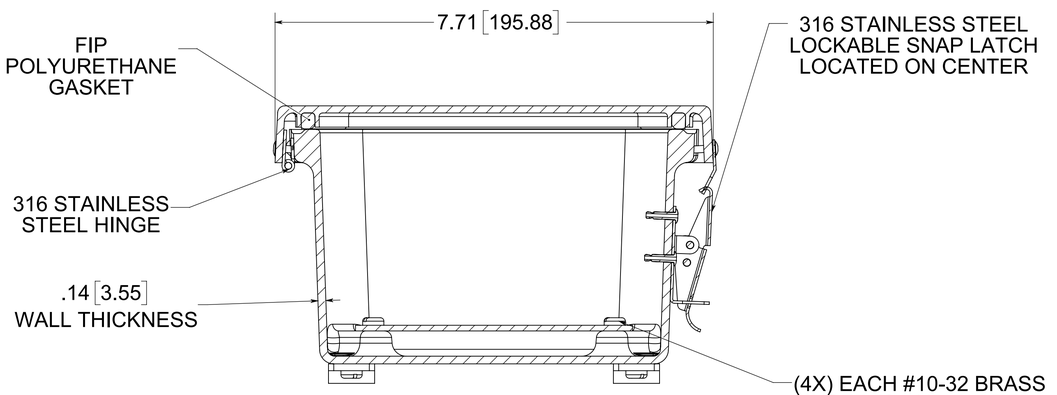

SECTION A-A

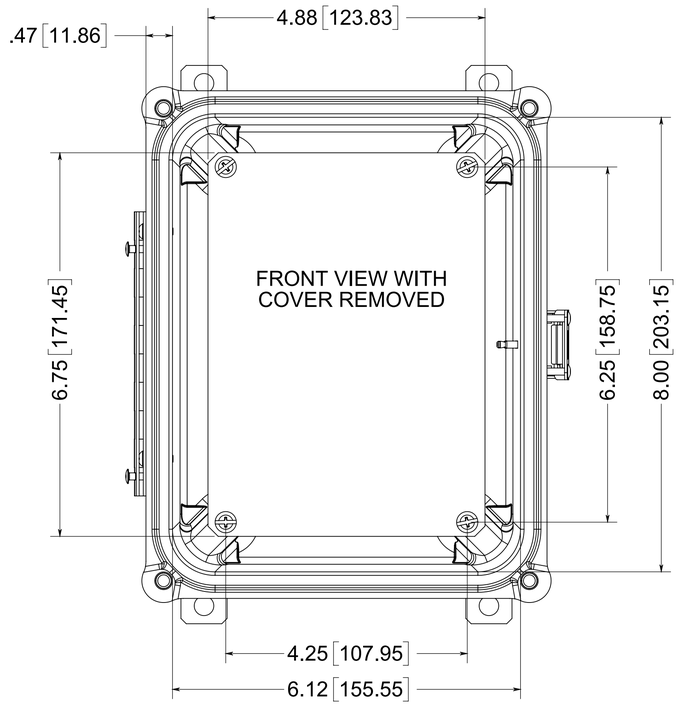

MATERIAL:
BOX- COMPRESSION MOLDED FIBERGLASS REINFORCED POLYESTER
COVER- COMPRESSION MOLDED FIBERGLASS REINFORCED POLYESTER
WINDOW- POLYCARBONATE

NOTE:
1. DATA SUBJECT TO CHANGE WITHOUT NOTICE

PART No. PJ864L
for more information visit
www.hammfg.com
Data subject to change without notice

Drawing Not to Scale