

# MLN SIL 200/1 gelb/yellow

Industrial Connectors:Measuring and Testing Equipment:Measuring leads:4 mm system

| Product description | |
|---|---|
| Description | Measuring lead, at either end 4 mm diameter plug with caged spring and 4 mm diameter socket for tower construction. Nickel-plated copper beryllium contact spring. Highly flexible, double insulated stranded lead, grip and lead shatter-proof. Built in colour indicator for easy identifcation of insulation damages. |
| Type | MLN SIL 200/1 gelb/yellow |
| Order No. | 934 094-103 |
| System | 4 mm system |
| Cable length | 200 cm |
| Conductor size | 1 mm² |
| Cable material | silicone |
| Cable color | yellow |
| Housing Color | yellow |
| Other standard types | black color,<br>order no. 934 094-100;<br>red color,<br>order no. 934 094-101;<br>blue color,<br>order no. 934 094-102;<br>green color,<br>order no. 934 094-104 |

**Drawing**

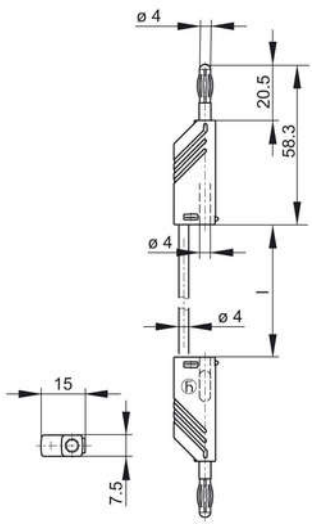


| Technical data | |
|---|---|
| Pin dimensions | 4 mm |
| Type of contact | pin (spring-loaded) |
| Type of termination | 4 mm diameter pin and socket |
| Cable type | LEH-XY |
| Cable specification | most flexible lead, high temperature resistant (soldering iron) |

| | |
|---|---|
| Wire stranding | 259 x 0,07 |
| Rated voltage | DC 60 V |
| Rated current | 16 A |
| Contact resistance | 40 mOhm |
| **Material** | |
| Contact material | contact pin: brass, contact spring: copper beryllium |
| Contact surface material | nickel-plated |
| Housing material | PA |
| **Environmental conditions** | |
| Temperature range | -15 °C to +70 °C |
| **Inflammability class** | |
| Cable | 94 HB |
| Housing | 94 V-2 |