General Purpose Snap Action Switch

GP Series



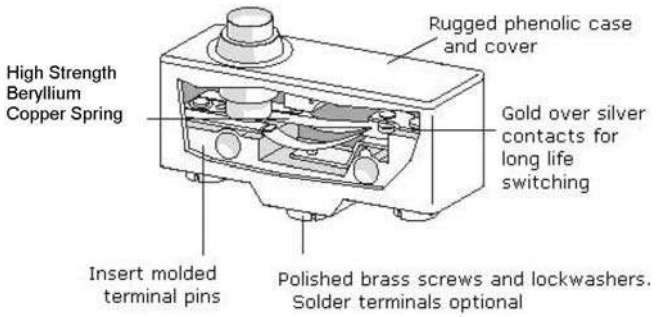

Features

- Ultra-small travel differential
- Mechanical life tested to over 20 million cycles
- Current rating up to 20 amps
- Wide variety of actuators
- Screw or solder terminals available
- VDE standard on 15A switches with screw terminals

Electrical Ratings		
Switch Series	**UL508**	**VDE Approval to EN60947**
GP*B	20A 250VAC	N/A
GP*C	15A 250VAC	15A 250VAC (Note: Only screw terminals have VDE approval)

Technical Specifications			Material Specifications	
Temperature Rating:		0°C + 55°C Max UL - 5°C to + 40°C VDE	**Case / Cover**	Phenolic
			Spring	Beryllium Copper
Dielectric Strength		1000 VAC 50/60 Hz for 1 minute	**Contacts:**	Silver Alloy
Insulation Resistance		100M ohms min at 500 VDC	**Terminals:**	Screw Terminals: Brass Solder Terminals: Copper Alloy
Initial Contact Resistance		15m ohms max		
			Contacts:	Silver Alloy
Mounting:	US Holes: Metric Holes:	#6-32 Fastener with 6.0 In-Lb Max Torque M4 Fastener with 6.0 In-Lb Max Torque		
UL File Number:		E184788	**Lever Actuator:**	Nickel Plated Steel

RoHS Compliant

Specifications subject to change without notice

VDE for 15 amp with screw terminals only

General Purpose Snap Action Switch

GP Series

Terminal Types

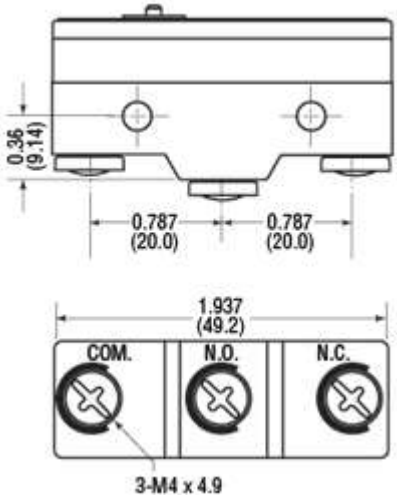

Screw Terminal

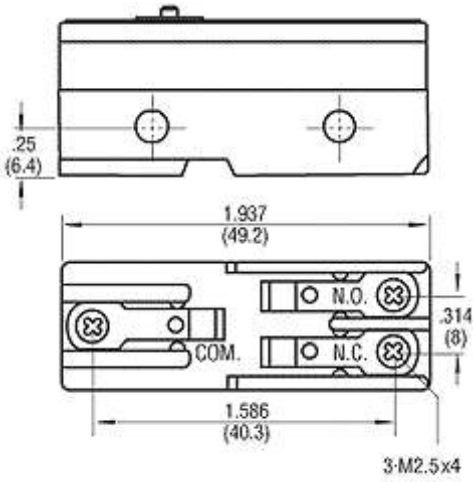

Solder Terminal

Mounting Holes

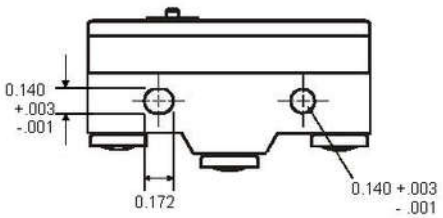

U.S. Version

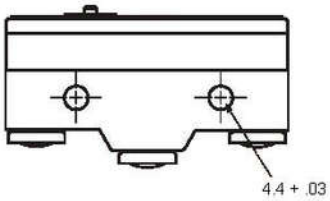

Metric Version

Dimensions inches(mm)

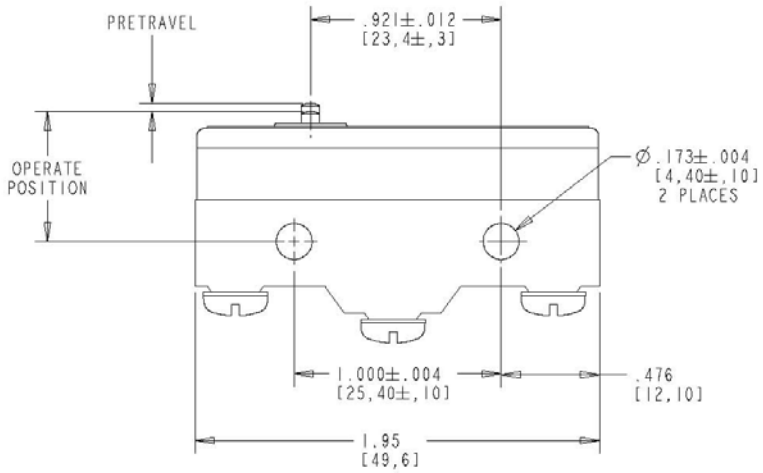

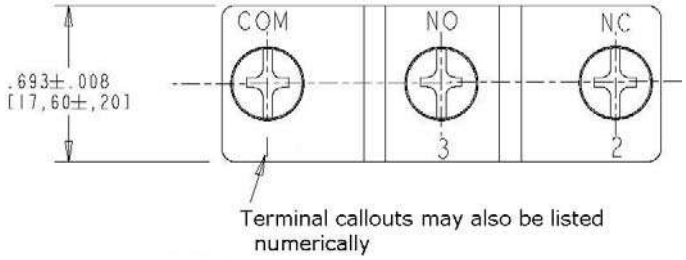

Terminal callouts may also be listed numerically

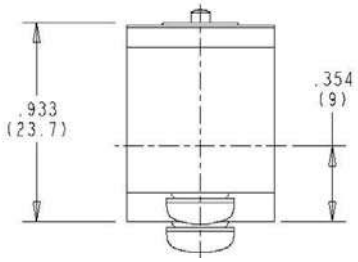

Note: GP Series switches are available with screw or solder terminals and with U.S. or metric holes

- For solder terminals, replace the “T’ in the third position of the part number with an ‘S’ (e.g. GPSCNA11 was GPTCNA11)

Ŧ For metric holes, replace the ‘1’ in the seventh position with a ‘0’ (e.g. GPTCNA01 was GPTCNA11)

	Part Number	Operating Force Maximum (oz)	Release Force Minimum (oz)	Pretravel Maximum inches (mm)	Operating Point Min/Max inches (mm)	Overtravel Minimum inches (mm)	Movement Differential Maximum inches (mm)	Mounting Hole	Terminal Type
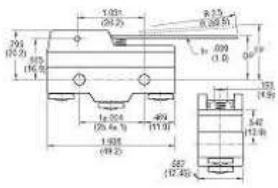	GPTCLS11	2.5	0.5	0.394 (10.00)	0.716 / 0.780 (18.20 / 19.80)	0.220 (5.61)	0.050 (1.27)	U.S.	Screw
	GPTBLS11	2.8	0.5	0.394 (10.00)	0.716 / 0.780 (18.20 / 19.80)	0.220 (5.61)	0.050 (1.27)	U.S.	Screw
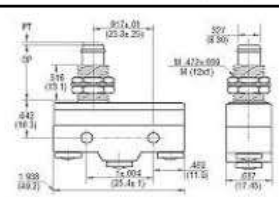	GPTCNH11	12.3	4	0.016 (0.41)	0.826 / 0.890 (20.98 / 22.60)	0.217 (5.51)	.002 (0.05)	U.S.	Screw
	GPTBNH11	22.9	7.1	0.028 (0.70)	0.826 / 0.890 (21.00 / 22.60)	0.217 (5.51)	0.008 (0.20)	U.S.	Screw
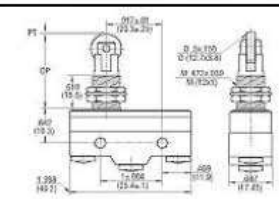	GPTCRH11	12.3	4	0.016 (0.41)	1.27 / 1.36 (32.2 / 34.6)	0.141 (3.58)	0.016 (0.4)	U.S.	Screw
	GPTBRH11	22.9	7.1	0.028 (0.70)	1.268 / 1.362 (32.20 / 34.60)	0.141 (3.58)	0.008 (0.20)	U.S.	Screw
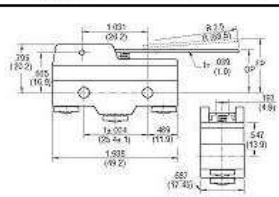	GPTCLS01	2.5	0.5	0.394 (10.00)	0.716 / 0.780 (18.20 / 19.80)	0.220 (5.6)	0.050 1.27)	Metric	Screw
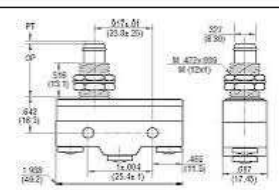	GPTCNH01	12.3	4	0.016 (0.41)	0.826 / 0.890 (20.98 / 22.60)	0.216 (5.5)	0.002 (0.05)	Metric	Screw
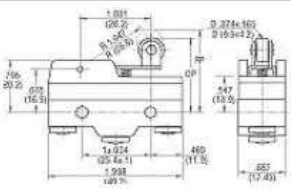	GPTCRM01	5.6	1.5	0.106 (2.70)	1.17 / 1.21 (29.80 / 30.60)	0.094 (2.40)	0.020 (0.50)	Metric	Screw
	GPTCRM11	5.6	1.5	0.106 (2.70)	1.17 / 1.21 (29.80 / 30.60)	0.094 (2.40)	0.020 (0.50)	U.S.	Screw
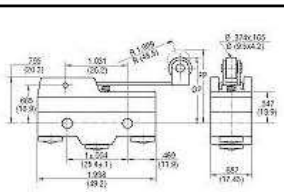	GPTCRS01	3.5	0.8	0.280 (7.10)	1.16 / 1.22 (29.40 / 31.00)	0.158 (4.00)	0.040 (1.02)	Metric	Screw
	GPTCRS11	3.5	0.8	0.280 (7.10)	1.16 / 1.22 (29.40 / 31.00)	0.158 (4.00)	0.040 (1.02)	U.S.	Screw
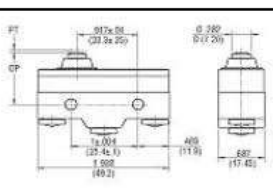	GPTCNC11	12.3	4	0..016 (0.40)	0.826 / 0.866 (21.00 / 22.00)	0.063 (1.60)	0.002 (0.05)	U.S.	Screw
	GPTBNC11	23	7.1	0.028 (0.7)	0.826 / 0.866 (21.00 / 22.00)	0.062 (1.6)	0.007 (0.18)	U.S.	Screw

Specifications subject to change without notice

Contact

Call, fax or visit our
Website for more information.

ZF Electronics Corporation
11200 88th Avenue
Pleasant Prairie, WI 53158

Phone: 262.942.6500
Web: www.cherrycorp.com
Email: cep_sales@zf.com
Fax: 262.942.6566

The manufacturer accepts no liability for errors or non-availability, and reserves the right to change specifications without prior notice.

Technical data relates to product specifications only. Features may differ from those described. Only drawings combined with product specifications shall be deemed binding.

© 2007 ZF Electronics Corporation

Last Updated: 030912