Time switch technology

Analogue time switches, Built-in installation, switching segments







tactic 112 A
tactic 212 A

Description

The universal time switches from the tactic product range offer a wide range of applications in buildings and outdoors. They are used, for example, in swimming pool control systems or sprinkler systems.

The analog 1-channel surface-mounted universal timers stand for simple operation and are equipped with a quartz or synchronous drive

tactic 112 A
- Without power reserve
- Synchronous drive

tactic 212 A
- With power reserve
- Quartz-controlled

Product selection

Program	Number of channels	Power reserve	Shortest switching time	Programmable all	Contact type	Operating voltage	Type
Daily program	1	–	15 min	15 min	Changer	230 V AC	tactic 112 A
		3 days	15 min	15 min	Changer	110–230 V AC	tactic 212 A

Technical data

	tactic 112 A	tactic 212 A
Operating voltage	230 V AC	110–230 V AC
Frequency	50 Hz	50–60 Hz
Mounting type	Surface-mounted	
Program	Daily program	
Number of switching elements	96	
Number of channels	1	
Contact type	Changeover contact	
Power reserve	–	max. 3 days
Drive	Synchronous motor	Quartz-controlled stepper motor
Switching output	Potential-free and phase-independent	
Switching capacity at 250 V AC, cos φ = 1	16 A	
Switching capacity at 250 V AC, cos φ = 0.6	8 A	

Analogue time switches, Built-in installation, switching segments

	tactic 112 A	tactic 212 A
Incandescent halogen lamp load	1400 W	
Shortest switching time	15 min	
Programmable all	15 min	
Stand-by power	0,9 W	0,6 W
Accuracy	Mains synchronized	≤ ± 1.5 s/day (quartz) at 25 °C
Manual switch	Auto / Fix ON / Fix OFF	
Housing and insulation material	High-temperature resistant, self-extinguishing thermoplastics	
Protection class	IP 20	
Protection class	II according to EN 60 730-1	
Ambient temperature	–20 °C … +50 °C	

Dimension drawings

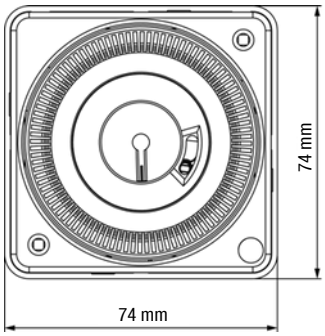

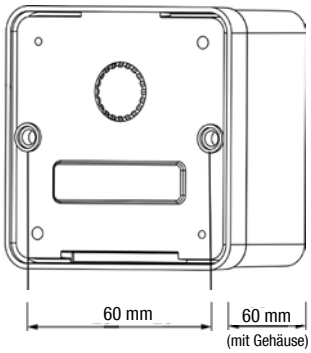

Connection example

