E75354

AS-Interface flat cable insulation displacement connector

FC Splitter ye ProcessL

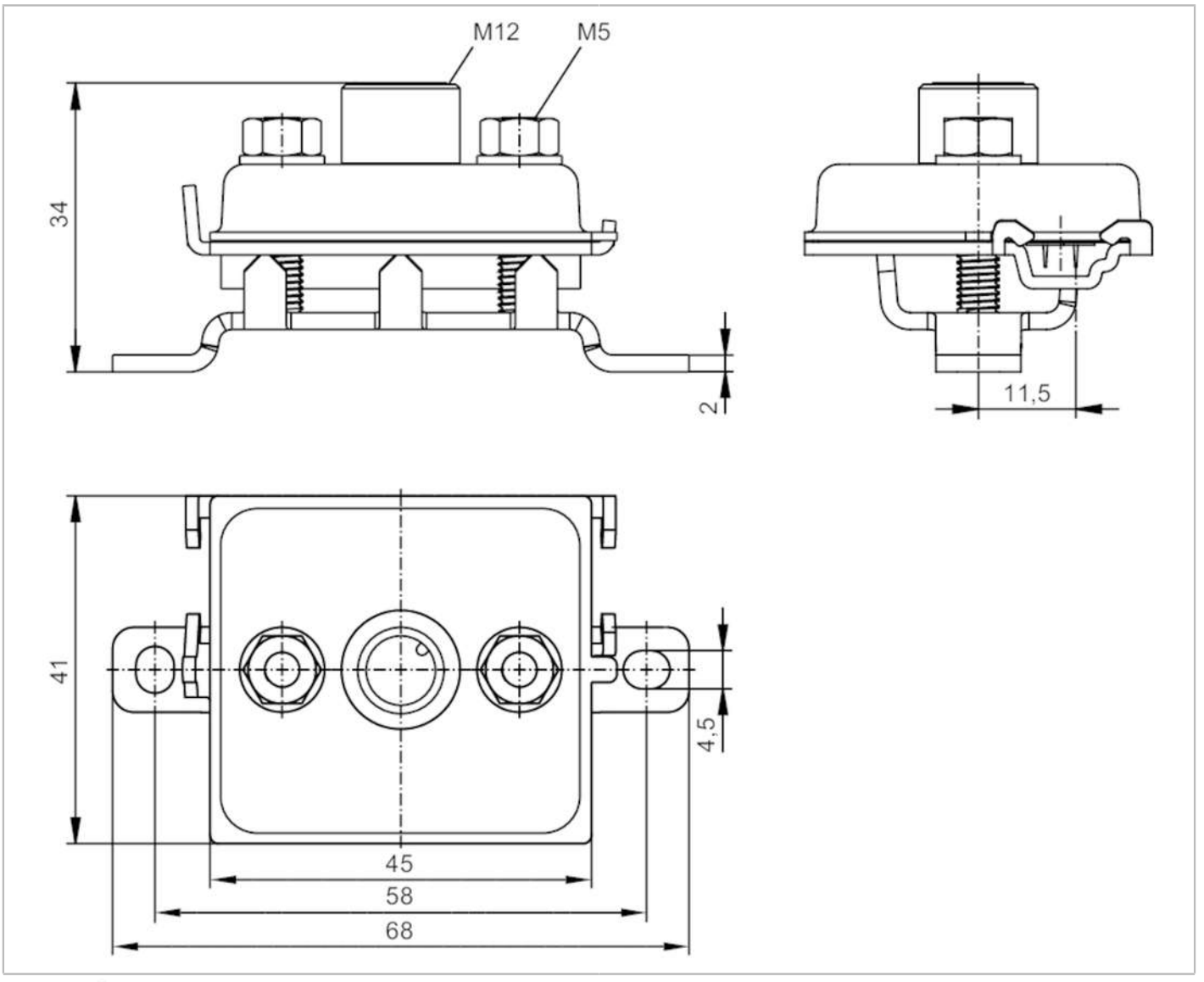

Application		
Design		AS-i
Application		hygienic and wet areas in the food industry
Electrical data		
Operating voltage	[V]	26.5...31.6 DC; (AS-i)
Protection class		III
Operating voltage AUX DC	[V]	18...32
Max. current load total	[A]	2
Operating conditions		
Ambient temperature	[°C]	-30...80
Max. relative air humidity	[%]	80; (31 °C; linearly decreasing to 50 % (40 °C))
Max. height above sea level	[m]	2000
Protection		IP 67; IP 68; IP 69K
Pollution degree		2

E75354

AS-Interface flat cable insulation displacement connector

FC Splitter ye ProcessL

Tests / approvals		
EMC	EN 61000-6-2	
Mechanical data		
Weight [g]	104.3	
Materials	metal parts: stainless steel (316L/1.4404); rubber gasket for contact pins: FPM; O-ring: EPDM	
Tightening torque [Nm]	2.5; (lock nuts)	
Accessories		
Accessories (optional)	Torque wrench, E70390	
Remarks		
Pack quantity	1 pcs.	

Electrical connection - socket

Connector: 1 x M12; coding: A; Tightening torque: 1.2...1.4 Nm

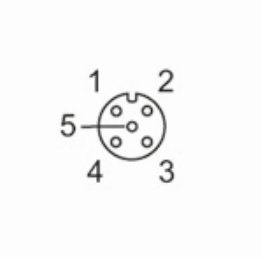

Connection	
1	AS-i +
2	n.c.
3	AS-i -
4	n.c.
5	n.c.