For static applications
1- and 2-axis measurement

IN41 | **Analog**



High accuracy with minimal movement.
Measurement is performed capacitively in acceleration measurement cells for applications with little or no movement. Vibrations and shocks can be compensated for within certain limits by software filters.

Analog Output | Analog Output

Order code 1-axis measurement

8.IN41 . 1 X X 1 . 1 1 X . XXXX
Type | a | b | c | d | | | f | g

a *Measurement axes*
1 = 1-axis
vertical mounting



b *Measuring range*
7 = 0° ... 360° (±180°)
8 = 0° ... 180° (±90°)

c *Analog interface*
1 = 4 ... 20 mA
2 = 0,1 ... 4,9 V
3 = 0,5 ... 4,5 V
4 = 0 ... 5 V
5 = 0 ... 10 V

d *Filter*
1 = no filter
Preset filter functions up to 10 Hz available on request

f *Type of connection*
1 = M12 connector, 8-pin
2 = M12 connector, 5-pin
4 = cable 5-core, open ended, 1 m
B = cable 5-core, open ended, special lengths

g *Special lengths*
only for type of connection **f** = *B*
(other lengths on request)
0050 = 5 m
0100 = 10 m

Stock types
8.IN41.1711.112

Order code 2-axis measurement

8.IN41 . 2 X X X . 1 1 X . XXXX
Type | a | b | c | d | | | f | g

a *Measurement axes*
2 = 2-axis
horizontal mounting



b *Measuring range*
1 = ±10°
2 = ±15°
3 = ±30°
4 = ±45°
5 = ±60°
6 = ±85°

c *Analog interface*
1 = 4 ... 20 mA
2 = 0,1 ... 4,9 V
3 = 0,5 ... 4,5 V
4 = 0 ... 5 V
5 = 0 ... 10 V

d *Filter*
1 = no filter
Preset filter functions up to 10 Hz available on request

f *Type of connection*
1 = M12 connector, 8-pin
2 = M12 connector, 5-pin
4 = cable 5-core, open ended, 1 m
B = cable 5-core, open ended, special lengths

g *Special lengths*
only for type of connection **f** = *B*
(other lengths on request)
0050 = 5 m
0100 = 10 m

Stock types
8.IN41.2611.112

© Fritz Kübler GmbH, subject to errors and changes. 06/2026

For static applications 1- and 2-axis measurement	IN41	Analog

Accessories

		Order no.
Teach adapter	for activating the control inputs for the following functions: - Reset to factory setting - Center point of the measurement - Scaling of the analog measuring range (start/end position) - Setting the sensor filter	
	**Teach adapter**, 5-pin	**05.TX40.1**
	**Teach adapter**, 8-pin	**8.0010.9000.0017**
EMC shield terminal	For an EMC-compliant installation of the cable - top-hat rail mounting - spring steel, galvanized - shield diameter 3.0 ... 12.0 mm	**8.0000.4G06.0312**
		

Cables and connectors

		Order no.
Preassembled cables	M12 female connector with coupling nut, 5-pin, A coded, straight single ended 2 m [6.56'] PVC cable	**05.00.6081.2211.002M**
	M12 female connector with coupling nut, 5-pin, A coded, straight DT04 connector, male contacts, 6-pin, straight 2 m [6.56'] PVC cable	**05.00.6091.22C7.002M**
	M12 female connector with coupling nut, 5-pin, A coded, straight single ended 2 m [6.56'] PUR cable	**05.00.60F1.2211.002M**
	M12 female connector with coupling nut, 8-pin, A coded, straight single ended 2 m [6.56'] PVC cable	**05.00.6041.8211.005M**
	M12 female connector with coupling nut, 8-pin, A coded, straight single ended 2 m [6.56'] PUR cable	**05.00.6051.8211.002M**
Connectors	M12 female connector with coupling nut, 8-pin, A coded, straight (metal)	**05.CMB 8181-0**
	M12 female connector with coupling nut, 5-pin, A coded, straight (metal)	**8.0000.5116.0000**

Further Kübler accessories can be found at: kuebler.com/accessories
Further Kübler cables and connectors can be found at: kuebler.com/connection-technology

© Fritz Kübler GmbH, subject to errors and changes. 06/2026

For static applications 1- and 2-axis measurement	IN41	Analog

Technical data

General data 1-axis measurement

Measuring range	0 ... 360°
Resolution	
current interface	0.01° internal sensor 12 bit D/A converter
voltage interface	12 bit
Repeat accuracy	≤ 0,2°
Linearity deviation	±0,1°
Temperature drift	typ. ±0.006 %/K
Accuracy (at 25°C)	±0.1 ... ±0.3° depending on the measuring range

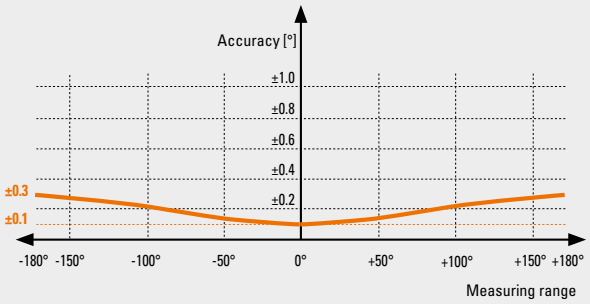

Course of the output signal – factory setting

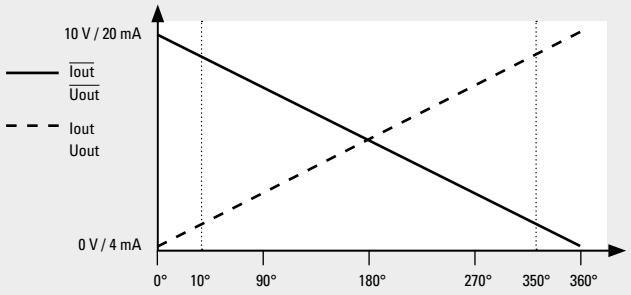

General data 2-axis measurement

Measuring range	-85° ... +85°
Resolution	
current interface	0.01° internal sensor 12 bit D/A converter
voltage interface	12 bit
Repeat accuracy	≤ 0,2°
Linearity deviation	±0,45°
Temperature drift	typ. ±0.006 %/K
Accuracy (at 25°C)	±0.1 ... ±0.7° depending on the measuring range

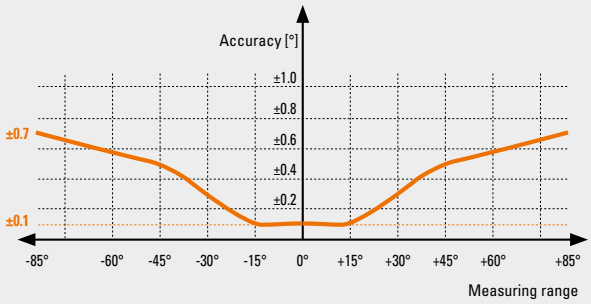

Course of the output signal – factory setting

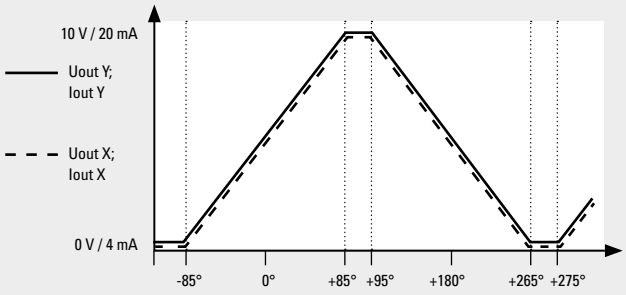

© Fritz Kübler GmbH, subject to errors and changes. 06/2026

For static applications
1- and 2-axis measurement

IN41 | **Analog**

Electrical characteristics current interface

Supply voltage	4 ... 20 mA	10 ... 30 V DC
Current consumption		max. 40 mA
Reverse polarity protection of the supply voltage		yes
PowerON Time (PowerOn until valid output value)		< 0.5 s
Output load	at 10 VDC at 24 VDC at 30 VDC	max. 200 Ohm max. 900 Ohm max. 1200 Ohm
Setting time		< 1 ms (R_{load} = 900 Ohm, 25 °C)
Sampling rate		50 Hz (20 ms)
Limit frequency	with Butterworth filter	0.1 ... 10 Hz, 8th order

Electrical characteristics voltage interface

Supply voltage	0.1 ... 4.9 V / 0.5 ... 5 V / 0 ... 5 V 0 ... 10 V	10 ... 30 V 15 ... 30 V
Current consumption (no load)		max. 40 mA
Reverse polarity protection of the supply voltage		yes
PowerON Time (PowerOn until valid output value)		< 0.5 s
Output load		max. 10 mA
Setting time		< 1 ms (R_{load} = 1000 Ohm, 25 °C)
Sampling rate		50 Hz (20 ms)
Limit frequency	with Butterworth filter	0.1 ... 10 Hz, 8th order

Mechanical characteristics

Electrical connection		M12 connector, 8-pin M12 connector, 5-pin cable, 8-pin cable, 5-pin
Weight		approx. 60 g [2.1 oz]
Protection acc. to EN 60529		IP68/IP69k
Working temperature range		-40 °C ... +85 °C [-40 °F ... +185 °F]
Material	housing	plastic, PC
Shock resistance acc. to EN 60068-2-27		100 m/s², 10 ... 2000 Hz
Vibration resistance acc. to EN 60068-2-6		1000 m/s², 6 ms
Dimensions		44.5 x 42.5 x 20 mm [1.75 x 1.67 x 0.79“]

EMC

Relevant standards	EN 61326-1	Electrical equipment for measurement, control and laboratory use
	EN 55011 Klasse B, EN 61000-6-3	Emitted interferences for residential environments

Approvals

E1 compliant in accordance with	ECE guideline
UL compliant in accordance with [1]	File no. E224618
CE compliant in accordance with	
EMC Directive	2014/30/EU
RoHS Directive	2011/65/EU

1) The IP protection class is not UL-tested. Verified by Kübler.

© Fritz Kübler GmbH, subject to errors and changes. 06/2026

For static applications 1- and 2-axis measurement | IN41 | Analog

Terminal assignment, 1-axis

Type of connection	M12 connector, 8-pin								
1	Signal – Interface 1 (current):	0 V	+V	Iout+	Iout-	$\overline{\text{Iout+}}$	$\overline{\text{Iout-}}$	Teach 1	Teach 2
	Signal – Interface 2, 3, 4, 5 (voltage):	0 V	+V	Uout+	Uout-	$\overline{\text{Uout+}}$	$\overline{\text{Uout-}}$	Teach 1	Teach 2
	Pin:	1	2	3	4	5	6	7	8



Type of connection	M12 connector, 5-pin					
2	Signal – Interface 1 (current):	+V	$\overline{\text{Iout+}}$	0 V	Iout+	Teach
	Signal – Interface 2, 3, 4, 5 (voltage):	+V	$\overline{\text{Uout+}}$	0 V	Uout+	Teach
	Pin:	1	2	3	4	5

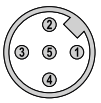

Type of connection	Cable, 8-pin								
3, A	Signal – Interface 1 (current):	0 V	+V	Iout+	Iout-	$\overline{\text{Iout+}}$	$\overline{\text{Iout-}}$	Teach 1	Teach 2
	Signal – Interface 2, 3, 4, 5 (voltage):	0 V	+V	Uout+	Uout-	$\overline{\text{Uout+}}$	$\overline{\text{Uout-}}$	Teach 1	Teach 2
	Core color:	WH	BN	GN	YE	GY	PK	BU	RD

Type of connection	Cable, 5-pin					
4, B	Signal – Interface 1 (current):	+V	$\overline{\text{Iout+}}$	0 V	Iout+	Teach
	Signal – Interface 2, 3, 4, 5 (voltage):	+V	$\overline{\text{Uout+}}$	0 V	Uout+	Teach
	Core color:	BN	GY	WH	GN	BU

Terminal assignment, 2-axis

Type of connection	M12 connector, 8-pin								
1	Signal – Interface 1 (current):	0 V	+V	Iout+ X	Iout- X	Iout+ Y	Iout- Y	Teach 1	Teach 2
	Signal – Interface 2, 3, 4, 5 (voltage):	0 V	+V	Uout+ X	Uout- X	Uout+ Y	Uout- Y	Teach 1	Teach 2
	Pin:	1	2	3	4	5	6	7	8



Type of connection	M12 connector, 5-pin					
2	Signal – Interface 1 (current):	+V	Iout+ Y	0 V	Iout+ X	Teach
	Signal – Interface 2, 3, 4, 5 (voltage):	+V	Uout+ Y	0 V	Uout+ X	Teach
	Pin:	1	2	3	4	5

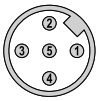

Type of connection	Cable, 8-pin								
3, A	Signal – Interface 1 (current):	0 V	+V	Iout+ X	Iout- X	Iout+ Y	Iout- Y	Teach 1	Teach 2
	Signal – Interface 2, 3, 4, 5 (voltage):	0 V	+V	Uout+ X	Uout- X	Uout+ Y	Uout- Y	Teach 1	Teach 2
	Core color:	WH	BN	GN	YE	GY	PK	BU	RD

Type of connection	Cable, 5-pin					
4, B	Signal – Interface 1 (current):	+V	Iout+ Y	0 V	Iout+ X	Teach
	Signal – Interface 2, 3, 4, 5 (voltage):	+V	Uout+ Y	0 V	Uout+ X	Teach
	Core color:	BN	GY	WH	GN	BU

+V Supply voltage +V DC
0V Supply voltage ground GND (0 V)

Teach 1 Input 1 for various teaching functions
Teach 2 Input 2 for various teaching functions

Uout+ X X axis voltage output
Uout- X X axis voltage output GND
Uout+ Y Y axis voltage output
Uout- Y Y axis voltage output GND

1-axis version
Uout+ Voltage output
Uout- Voltage output GND
$\overline{\text{Uout+}}$ Inverted voltage output
$\overline{\text{Uout-}}$ Inverted voltage output GND

Iout+ X X axis current output
Iout- X X axis current output GND
Iout+ Y Y axis current output
Iout- Y Y axis current output GND

1-axis version
Iout+ Current output
Iout- Current output GND
$\overline{\text{Iout+}}$ Inverted current output
$\overline{\text{Iout-}}$ Inverted current output GND

© Fritz Kübler GmbH, subject to errors and changes. 06/2026

For static applications 1- and 2-axis measurement	IN41	Analog

Dimensions

Dimensions in mm [inch]

Version with M12 connector

1 RGB LED status indicator
2 M12 connector

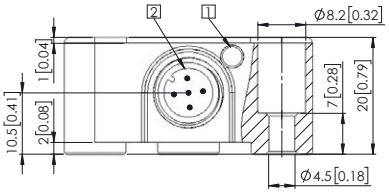

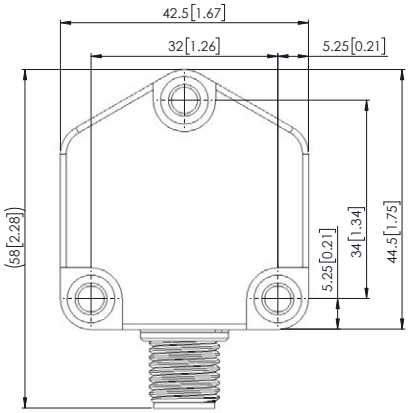

Version with cable

1 RGB LED status indicator

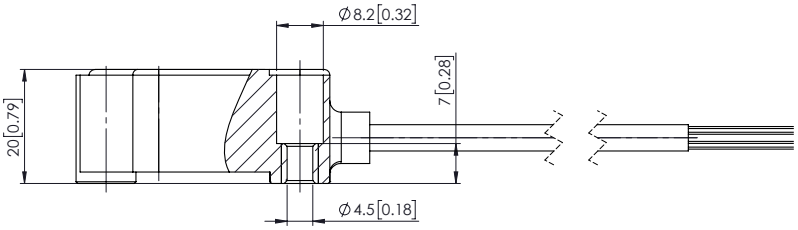

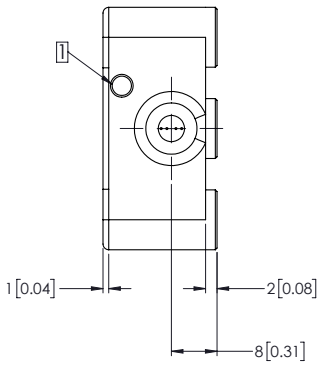

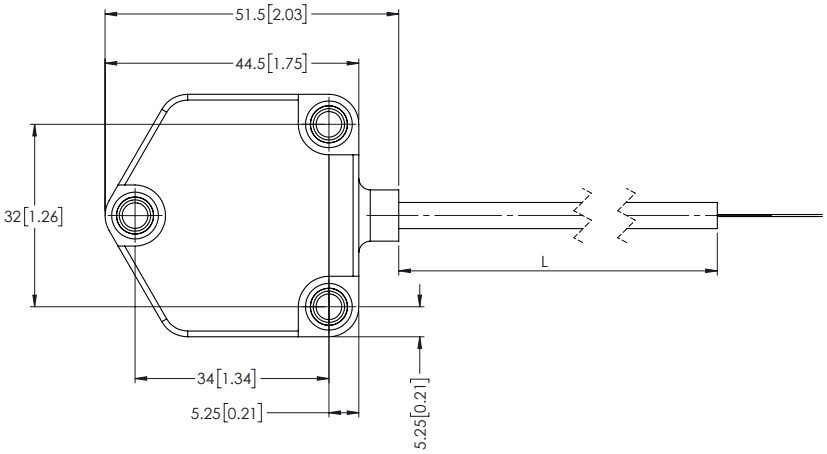

© Fritz Kübler GmbH, subject to errors and changes. 06/2026

For static applications 1- and 2-axis measurement	IN41	Analog

Technology in detail

Quick setting options via the Easy-Teach function with teach adapter

Connection
The teach adapter ❷ is connected between the sensor ❶ and the connection cable to the application ❹.

Parameterization
The following settings can be made quickly and easily by pressing the toggle switch ❸:
- Reset to factory setting
- Start/end point of the measuring range (for 1-axis measurement)
- Midpoint of the measuring range
- Setting the sensor filter: no filter, 0.1 Hz, 0.3 Hz, 0.5 Hz, 1.0 Hz, 2.0 Hz, 5.0 Hz or 10.0 Hz

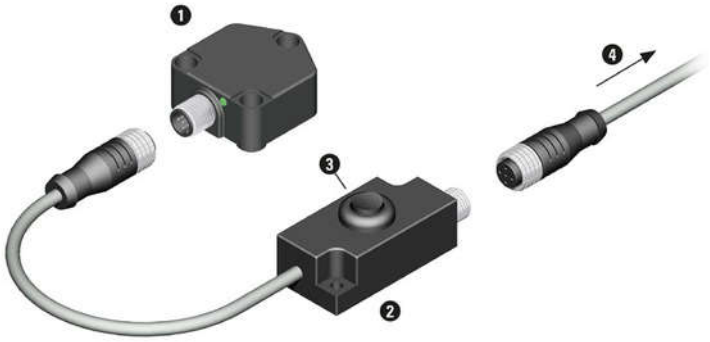

© Fritz Kübler GmbH, subject to errors and changes. 06/2026