M95009

Magnetic sensor with three switch points for monitoring locked states

M9G4085PARKG/A/US

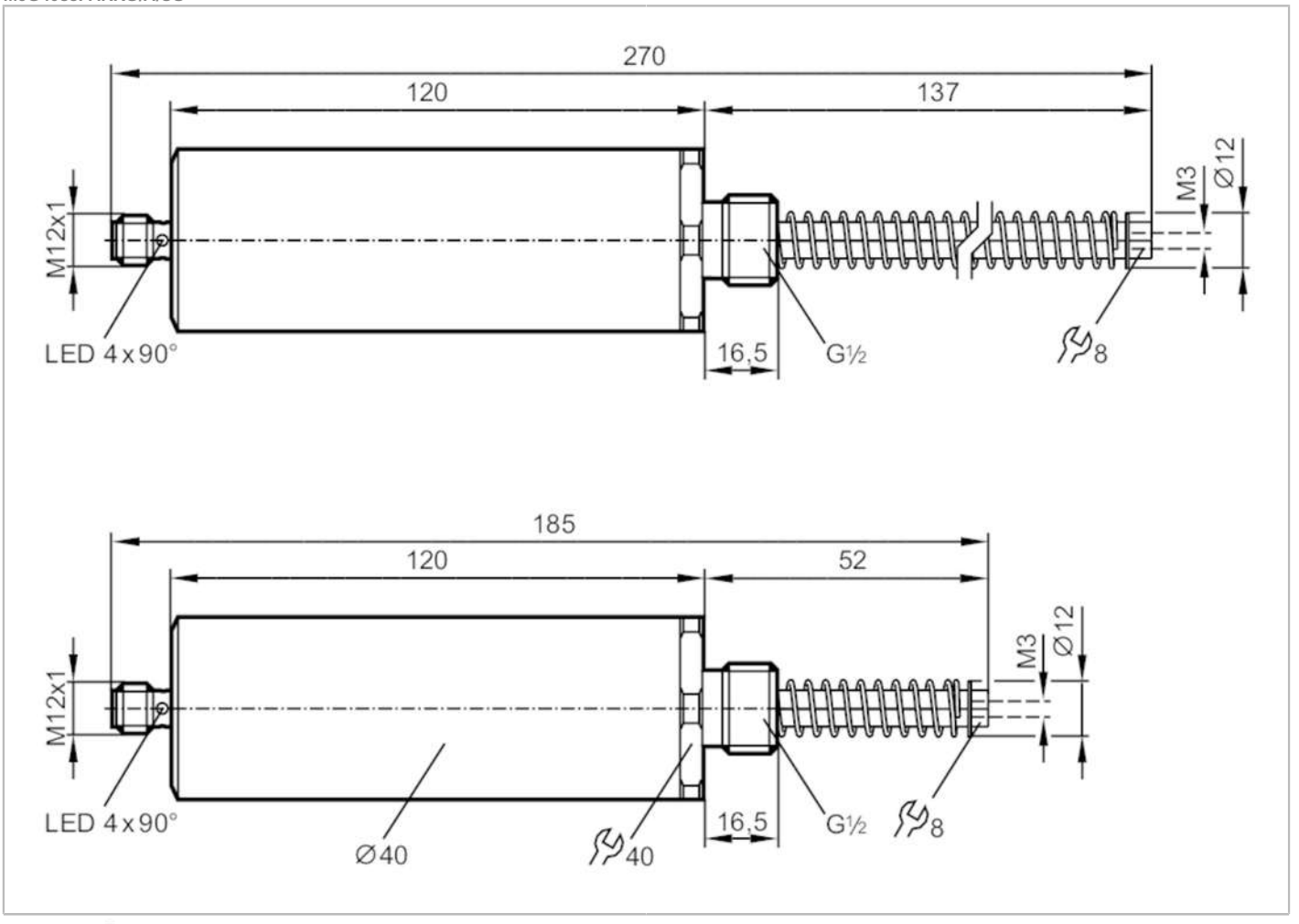

Product characteristics		
Output function		2 x normally closed / 1 x normally open
Dimensions	[mm]	Ø 40
Application		
Special feature		Gold-plated contacts
Electrical data		
Operating voltage	[V]	10...36 DC; ("supply class 2" to cULus)
Protection class		III
Reverse polarity protection		yes
Outputs		
Output function		2 x normally closed / 1 x normally open
Max. voltage drop switching output DC	[V]	5.4
Minimum load current	[mA]	2
Max. leakage current	[mA]	0.5
Permanent current rating of switching output DC	[mA]	100
Switching frequency DC	[Hz]	0.5

M95009

Magnetic sensor with three switch points for monitoring locked states

M9G4085PARKG/A/US

Short-circuit protection		yes	
Overload protection		yes	
Detection zone			
Measuring range	[mm]	52...137	
Accuracy / deviations			
Hysteresis	[mm]	0.5	
Operating conditions			
Ambient temperature	[°C]	-40...70	
Protection		IP 20; IP 67; (plunger side: IP 20; connector side: IP 67)	
Tests / approvals			
EMC		EN 61000-4-2 ESD	4 kV CD / 8 kV AD
		EN 61000-4-3 HF radiated	3 V/m
		EN 61000-4-4 Burst	2 kV
		EN 61000-4-6 HF conducted	10 V
		EN 55011 emission	class B
		IEC 60255-5	4 kV line to line, Ri: 500 Ohm
MTTF	[years]	277	
UL approval		UL Approval no.	C002
Mechanical data			
Weight	[g]	691	
Dimensions	[mm]	Ø 40	
Materials		brass white bronze coated; plunger: stainless steel; LED window: PA	
Tightening torque	[Nm]	< 20	
Displays / operating elements			
Display		switching status	4 x 90° LED, yellow OUT 1
		switching status	4 x 90° LED, red OUT 3
Remarks			
Remarks		On delivery: all outputs / LEDs switch on/off / flashing	
Pack quantity		1 pcs.	

Electrical connection - plug

Connector: 1 x M12; coding: A; Contacts: gold-plated



M95009

Magnetic sensor with three switch points for monitoring locked states

M9G4085PARKG/A/US

Connection

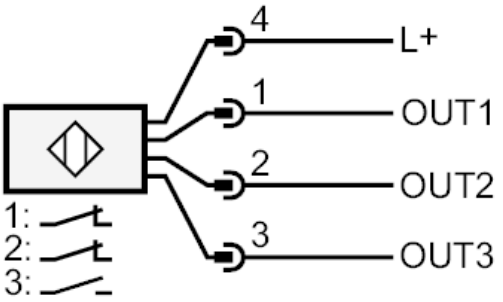

OUT1:	locked
OUT2:	partly locked
OUT3:	unlocked