TI01402F/00/EN/05.23-00
71624371
2023-09-30

Technical Information
Liquiphant FTL41

Vibronic



Point level switch for liquids

Application

- Limit switch for minimum or maximum detection in tanks, containers and piping with all types of liquids, even in hazardous areas
- Process temperature range: −40 to +150 °C (−40 to +302 °F)
- Pressures up to 40 bar (580 psi)
- Viscosities up to 10 000 mPa·s
- Ideal substitute for float switches, as reliable function is not affected by flow, turbulence, air bubbles, foam, vibration, solids content or buildup.

Advantages

- No calibration needed: Quick, low-cost commissioning
- No mechanically moving parts: No maintenance, no wear, long operating life
- Functional safety: Monitoring of vibration frequency of the tuning fork

Endress+Hauser
People for Process Automation

Table of contents

About this document 4
Symbols 4

Function and system design 5
point level detection 5
Measuring principle 5
Measuring system 5

Input 5
Measured variable 5
Measuring range 5

Output 5
Output and input variants 5
Output signal 6
Ex connection data 6

3-wire DC-PNP (electronic insert FEL42) 6
Supply voltage 6
Power consumption 6
Current consumption 6
Load current 6
Residual current 6
Residual voltage 6
Behavior of output signal 6
Terminals 6
Overvoltage protection 6
Terminal assignment 7
Behavior of the switch output and signaling 7

Universal current connection with relay output (electronic insert FEL44) 7
Supply voltage 8
Power consumption 8
Connectable load 8
Behavior of output signal 8
Terminals 8
Overvoltage protection 8
Terminal assignment 9
Behavior of the switch output and signaling 9

2-wire NAMUR > 2.2 mA/< 1.0 mA (electronic insert FEL48) 9
Supply voltage 10
Power consumption 10
Behavior output signal 10
Terminals 10
Overvoltage protection 10
Terminal assignment 10
Behavior of the switch output and signaling 11

Performance characteristics 11
Reference operating conditions 11
Take switch point into consideration 11
Maximum measured error 12
Hysteresis 12
Non-repeatability 12
Influence of the process temperature 12
Influence of the process pressure 12
Influence of the process medium density (at room temperature and normal pressure) 12

Mounting 13
Mounting location, orientation 13
Installation instructions 13
Installing the device in piping 15
Aligning the cable entry 15
Special mounting instructions 16

Environment 17
Ambient temperature range 17
Storage temperature 18
Humidity 18
Operating altitude 18
Climate class 18
Degree of protection 18
Vibration resistance 18
Shock resistance 18
Mechanical load 18
Pollution degree 18
Electromagnetic compatibility (EMC) 18

Process 18
Process temperature range 18
Thermal shock 19
Process pressure range 19
Overpressure limit 19
Density 19
Viscosity 19
Pressure tightness 20
Solids contents 20

Mechanical construction 20
Design, dimensions 20
Dimensions 20
Weight 27
Materials 27
Surface roughness 28

User interface 28
Operation concept 28
Onsite operation 29

Certificates and approvals 30
CE mark 30
RCM marking 30
Ex approval 30
General material compliance 30
Overfill protection 30
Marine approvals 30
CRN approval 30
Service 31
Test, certificate, declaration 31

Pressure Equipment Directive 31
Process seal as per ANSI/ISA 12.27.01 31
EAC conformity 31
ASME B 31.3/31.1 31

Ordering information 31
TAG 32
Test reports, declarations and inspection certificates 32

Accessories 32
Protective cover for single compartment housing, aluminum or 316L 32
M12 socket 33
Sliding sleeves for unpressurized operation 33
High pressure sliding sleeves 34
Weld-in adapter 35

Documentation 35
Standard documentation 35
Supplementary device-dependent documentation 36

About this document

Symbols

Safety symbols

DANGER

This symbol alerts you to a dangerous situation. Failure to avoid this situation will result in serious or fatal injury.

WARNING

This symbol alerts you to a dangerous situation. Failure to avoid this situation can result in serious or fatal injury.

CAUTION

This symbol alerts you to a dangerous situation. Failure to avoid this situation can result in minor or medium injury.

NOTICE

This symbol contains information on procedures and other facts which do not result in personal injury.

Electrical symbols

⏚ Ground connection
Grounded clamp, which is grounded via a grounding system.

⊜ Protective earth (PE)
Ground terminals, which must be grounded prior to establishing any other connections. The ground terminals are located on the inside and outside of the device.

Symbols for certain types of information

✓ Permitted
Procedures, processes or actions that are permitted.

✗ Forbidden
Procedures, processes or actions that are forbidden.

Tip
Indicates additional information

Reference to documentation

Reference to another section

1., 2., 3. Series of steps

Symbols in graphics

A, B, C ... View

1, 2, 3 ... Item numbers

Hazardous area

Safe area (non-hazardous area)

Function and system design

point level detection

Maximum or minimum detection for liquids in tanks or pipes in all industries. Suitable for leakage monitoring, pump dry-running protection or overfill prevention, for example .

Specific versions are suitable for use in hazardous areas.

The point level switch differentiates between the "covered" and "not covered" conditions.

Depending on the MIN (minimum detection) or MAX (maximum detection) modes, there are two possibilities in each case: OK status and demand mode.

OK status
- In MIN mode, the fork is covered, e.g. Pump dry running protection
- In MAX mode, the fork is not covered e.g. overfill prevention

Demand mode
- In MIN mode, the fork is not covered e.g. pump dry running protection
- In MAX mode, the fork is covered e.g. overfill prevention

Measuring principle

The sensor's tuning fork vibrates at its intrinsic frequency. As soon as the liquid covers the tuning fork, the vibration frequency decreases. The change in frequency causes the point level switch to switch.

Measuring system

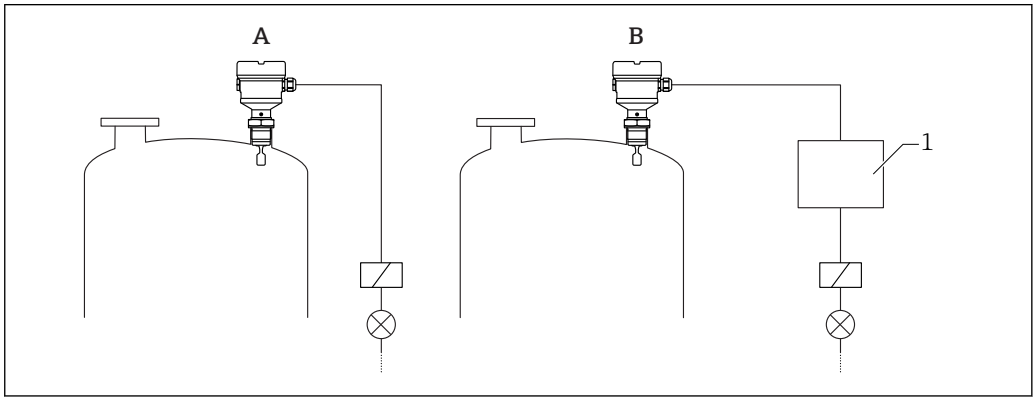

1 Example of a measuring system

A Device for direct connection of a load
B Device for connection to a separate switching unit or PLC
1 Switching unit, PLC etc.

Input

Measured variable

Level (point level), MAX or MIN safety

Measuring range

Depends on the installation location and the pipe extension ordered

Output

Output and input variants

Electronic inserts

3-wire DC-PNP (FEL42)
- Three-wire direct current version
- Switches the load via the transistor (PNP) and separate connection, e.g. in conjunction with programmable logic controllers (PLC)

Universal current connection, relay output (FEL44)
Switches the loads via 2 potential-free changeover contacts

2-wire NAMUR > 2.2 mA/< 1.0 mA (FEL48)
- For separate switching unit
- Signal transmission H-L edge 2.2 to 3.8 mA / 0.4 to 1.0 mA as per IEC 60947-5-6 (NAMUR) on two-wire cabling

Output signal

Switch output

Preset switching delay times for the point level switches can be ordered for the following ranges:
- 0.5 s when the tuning fork is covered and 1.0 s when the tuning fork is uncovered (factory setting)
- 0.25 s when the tuning fork is covered and 0.25 s when the tuning fork is uncovered
- 1.5 s when the tuning fork is covered and 1.5 s when the tuning fork is uncovered
- 5.0 s when the tuning fork is covered and 5.0 s when the tuning fork is uncovered

Ex connection data

See safety instructions (XA): All data relating to explosion protection are provided in separate Ex documentation and are available from the Downloads area of the Endress+Hauser website. The Ex documentation is supplied as standard with all devices approved for use in explosion hazardous areas.

3-wire DC-PNP (electronic insert FEL42)

- Three-wire DC version
- Switches the load via the transistor (PNP) and separate connection, e.g. in conjunction with programmable logic controllers (PLC), DI modules according to EN 61131-2

Supply voltage

⚠ WARNING

Failure to use the prescribed power unit.
Risk of potentially life-threatening electric shock!
- ▶ The FEL42 may only be powered by power supply units with secure galvanic isolation in accordance with IEC 61010-1.

$U = 10$ to 55 V_{DC}

The device must be powered by a voltage supply categorized as "CLASS 2" or "SELV".

Comply with the following according to IEC/EN61010-1: provide a suitable circuit breaker for the device and limit the current to 500 mA, e.g. by installing a 0.5 A fuse (slow-blow) in the power supply circuit.

Power consumption

$P < 0.5$ W

Current consumption

$I \leq 10$ mA (without load)

The red LED flashes in the event of an overload or short-circuit. Check for an overload or short-circuit every 5 s.

Load current

$I \leq 350$ mA with overload and short-circuit protection

Residual current

$I < 100$ µA (for blocked transistor)

Residual voltage

$U < 3$ V (for switched through transistor)

Behavior of output signal
- OK status: switched through
- Demand mode: blocked
- Alarm: blocked

Terminals

Terminals for cable cross-section up to 2.5 mm^2 (14 AWG). Use ferrules for the wires.

Overvoltage protection

Overvoltage category I

Terminal assignment

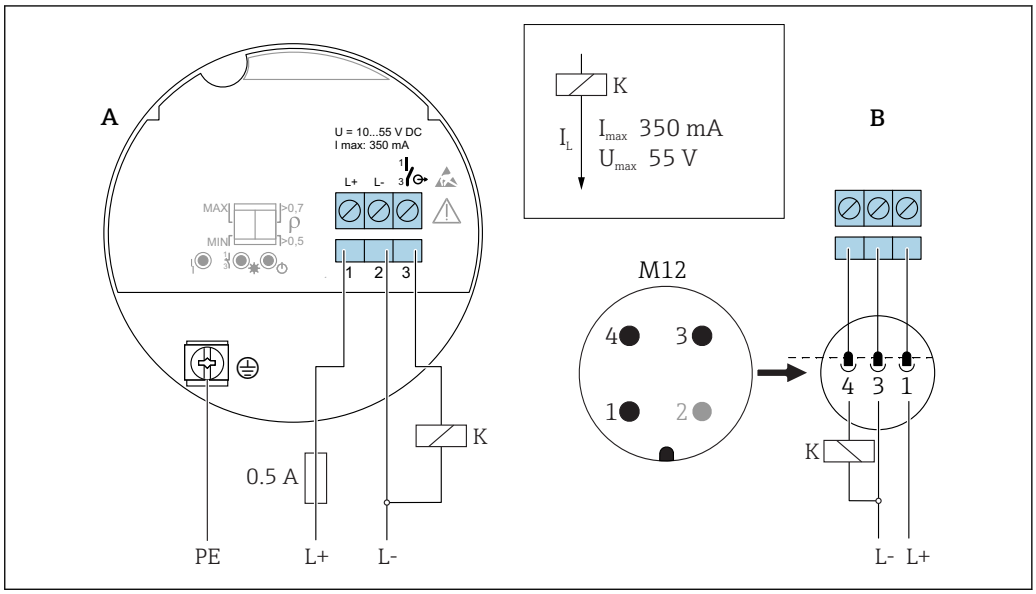

2 *Terminal assignment FEL42*

A Terminal assignment at electronic insert
B Terminal assignment at M12 plug according to EN61131-2 standard

Behavior of the switch output and signaling

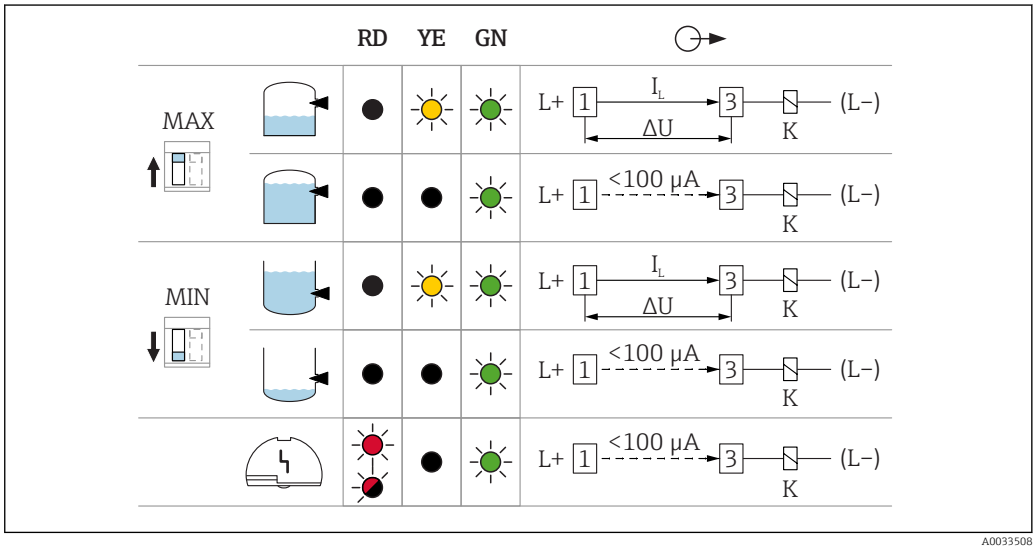

3 *FEL42 switching behavior, signaling LED*

MAX DIP switch for setting the MAX safety
MIN DIP switch for setting the MIN safety
RD LED red for warning or alarm
YE LED yellow, switch status
GN LED green, operational status, device on
I_L Load current switched through

Universal current connection with relay output (electronic insert FEL44)

- Switches the loads via 2 potential-free change-over contacts
- 2 separate change-over contacts (DPDT)

⚠ WARNING

An error at the electronic insert can cause the permitted temperature for touch-safe surfaces to be exceeded. This presents a risk of burns.

► Do not touch the electronics in the event of an error!

Supply voltage

U= 19 to 253 V_{AC} / 19 to 55 V_{DC}

Comply with the following according to IEC/EN61010-1: provide a suitable circuit breaker for the device and limit the current to 500 mA, e.g. by installing a 0.5 A fuse (slow-blow) in the power supply circuit.

Power consumption

S < 25 VA, P < 1.3 W

Connectable load

Loads switched via 2 potential-free changeover contacts (DPDT)

- I_{AC} ≤ 6 A, U~ ≤ AC 253 V; P~ ≤ 1 500 VA, cos φ = 1, P~ ≤ 750 VA, cos φ > 0.7
- I_{DC} ≤ 6 Ato DC 30 V, I_{DC} ≤ 0.2 A to 125 V

Additional restrictions for the connectable load depend on the selected approval. Pay attention to the information in the Safety Instructions (XA).

According to IEC 61010, the following applies: Total voltage from relay outputs and power supply ≤ 300 V.

Use electronic insert FEL42 DC PNP for small DC load currents, e.g. for connection to a PLC.

Relay contact material: silver/nickel AgNi 90/10

When connecting a device with high inductance, provide a spark suppressor to protect the relay contact. A fine-wire fuse (depending on the connected load) protects the relay contact in the event of a short-circuit.

Both relay contacts switch simultaneously.

Behavior of output signal

- OK status: relay energized
- Demand mode: relay de-energized
- Alarm: relay de-energized

Terminals

Terminals for cable cross-section up to 2.5 mm^2 (14 AWG). Use ferrules for the wires.

Overvoltage protection

Overvoltage category II

Terminal assignment

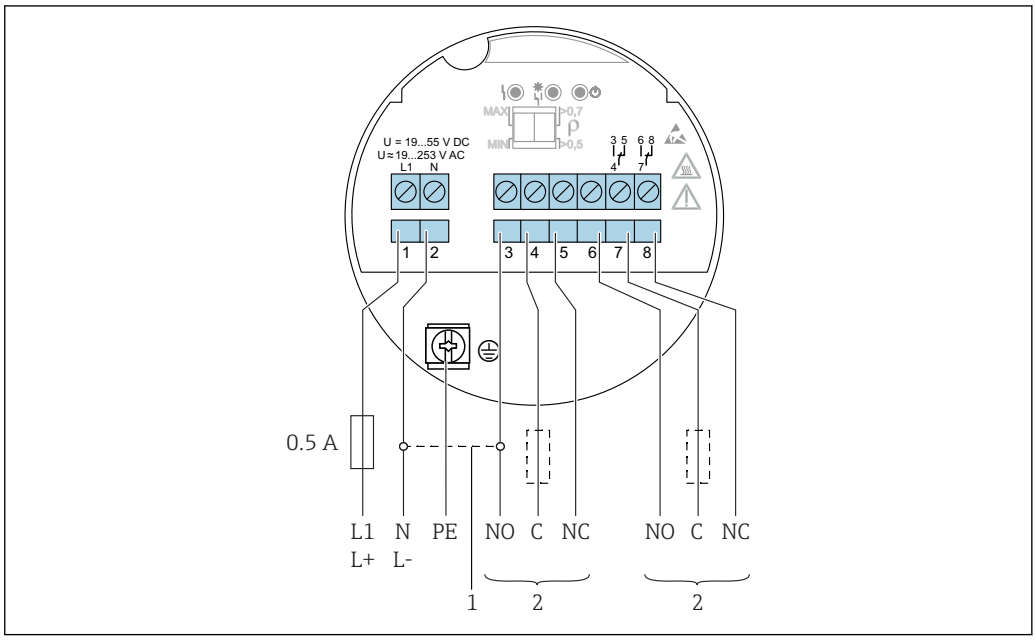

4 Universal current connection with relay output, electronic insert FEL44

1 When bridged, the relay output works with NPN logic
2 Connectable load

Behavior of the switch output and signaling

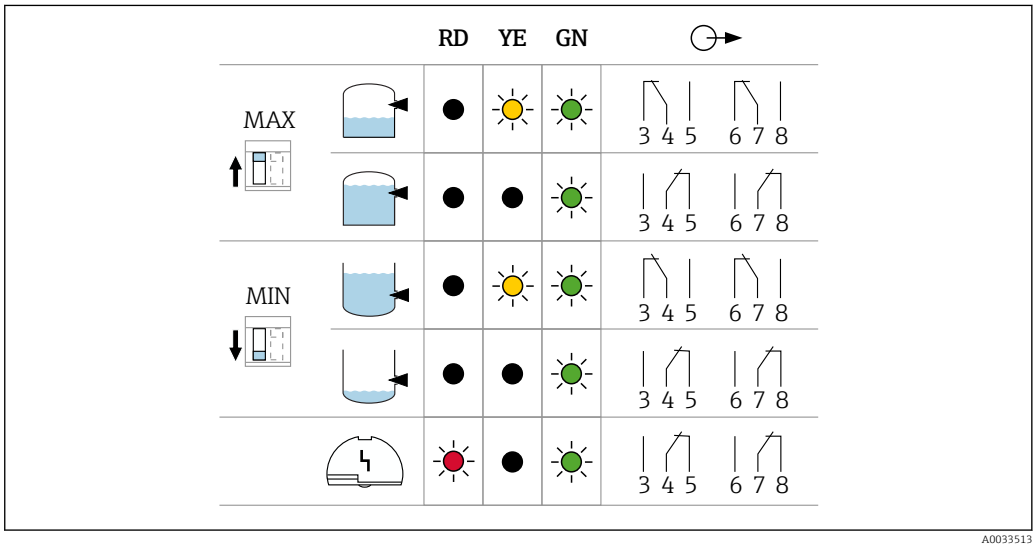

5 FEL44 switching behavior, signaling LED

MAX DIP switch for setting the MAX safety
MIN DIP switch for setting the MIN safety
RD LED red for alarm
YE LED yellow, switch status
GN LED green, operational status, device on

2-wire NAMUR > 2.2 mA/< 1.0 mA (electronic insert FEL48)

- To connect to isolating amplifiers according to NAMUR (IEC 60947-5-6), e.g. Nivotester FTL325N from Endress+Hauser
- To connect to isolating amplifiers of third-party suppliers according to NAMUR (IEC 60947-5-6), a permanent power supply for the electronic insert FEL48 must be ensured
- Signal transmission H-L edge 2.2 to 3.8 mA/0.4 to 1.0 mA according to NAMUR (IEC 60947-5-6) on two-wire cabling

Supply voltage

$U = 8.2\ V_{DC}$

The device must be powered by a voltage supply categorized as "CLASS 2" or "SELV".

Comply with the following according to IEC/EN61010-1: provide a suitable circuit breaker for the device.

Power consumption

P < 50 mW

Behavior output signal

- OK state: Current 2.2 to 3.8 mA
- Demand mode: Current 0.4 to 1.0 mA
- Alarm: Current 0.4 to 1.0 mA

Terminals

Terminals for cable cross-section up to 2.5 mm^2 (14 AWG). Use ferrules for the wires.

Overvoltage protection

Overvoltage category I

Terminal assignment

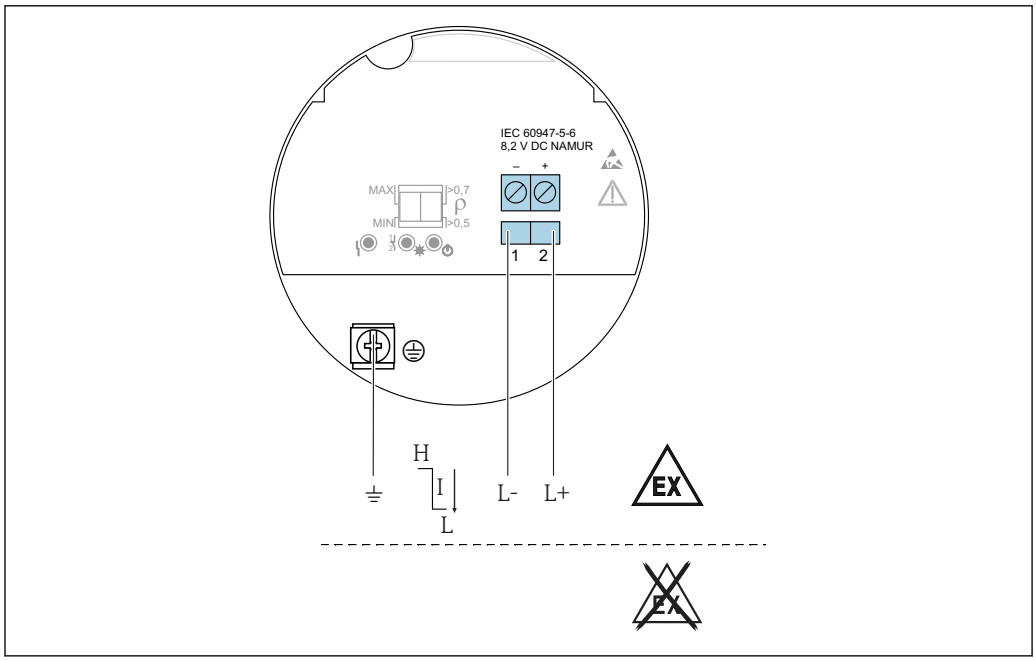

A0036058

6 2-wire NAMUR ≥ 2.2 mA/≤ 1.0 mA, electronic insert FEL48

Behavior of the switch output and signaling

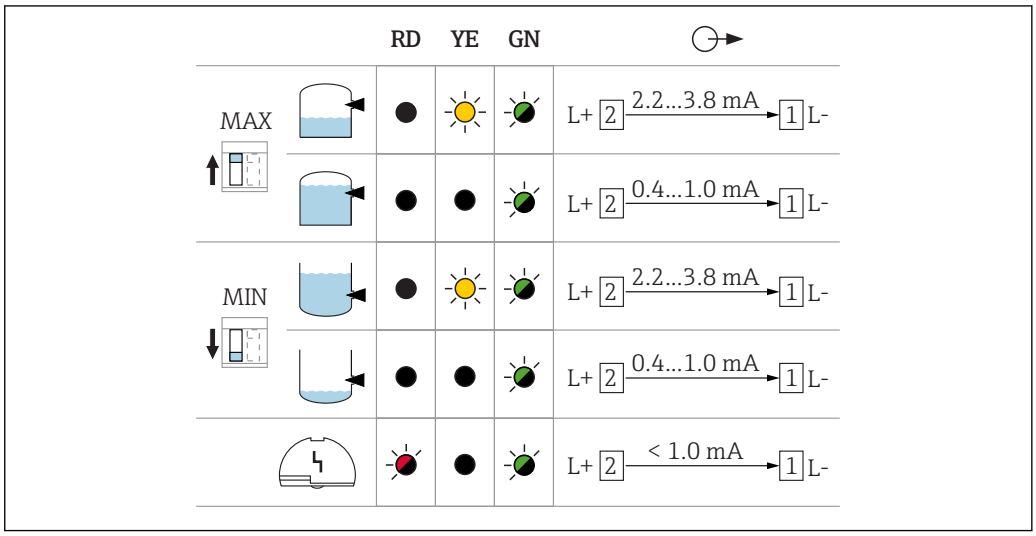

7 *FEL48 switching behavior and signaling*

MAX DIP switch for setting the MAX safety
MIN DIP switch for setting the MIN safety
RD LED red for alarm
YE LED yellow, switch status
GN LED green, operational status, device on

Performance characteristics

Reference operating conditions

- As per IEC 62828-2
- Ambient temperature:+23 °C (+73 °F)
- Process temperature: +23 °C (+73 °F)
- Humidity φ = constant, in range: 5 to 80 % rF ± 5 %
- Medium density (water): 1 g/cm³ (62.4 lb/ft³)
- Medium viscosity: 1 mPa·s
- Atmospheric pressure p_U = constant, in range: 860 to 1060 mbar (12.47 to 15.37 psi)
- Process pressure: atmospheric pressure/unpressurized
- Sensor installation: vertically from above
- Switch direction of sensor: uncovered to covered
- Load with HART: 250 Ω
- Supply voltage: 24 V DC ±3 V DC

Take switch point into consideration

The following are typical switch points, depending on the orientation of the point level switch.

Water +23 °C (+73 °F)

Minimum distance between the tuning fork and the tank wall or pipe wall: 10 mm (0.39 in)

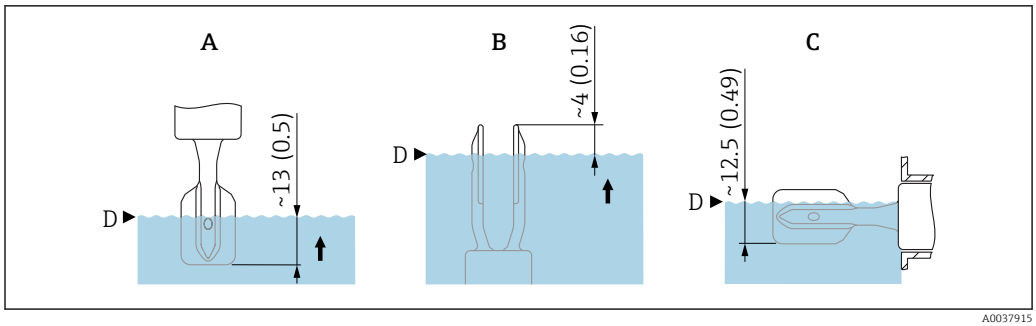

8 *Typical switch points. Unit of measurement mm (in)*

A Installation from above
B Installation from below
C Installation from the side
D Switch point

Maximum measured error	At reference operating conditions: max. ± 1 mm (0.04 in) at switch point
Hysteresis	Typically 2.5 mm (0.1 in)
Non-repeatability	0.5 mm (0.02 in)
Influence of the process temperature	The switch point moves between +1.4 to −2.6 mm (+0.06 to −0.1 in) in the temperature range from −40 to +150 °C (−40 to +302 °F)
Influence of the process pressure	The switch point moves between 0 to 2.6 mm (0 to 0.1 in) in the pressure range from −1 to +40 bar (−14.5 to +580 psi)
Influence of the process medium density (at room temperature and normal pressure)	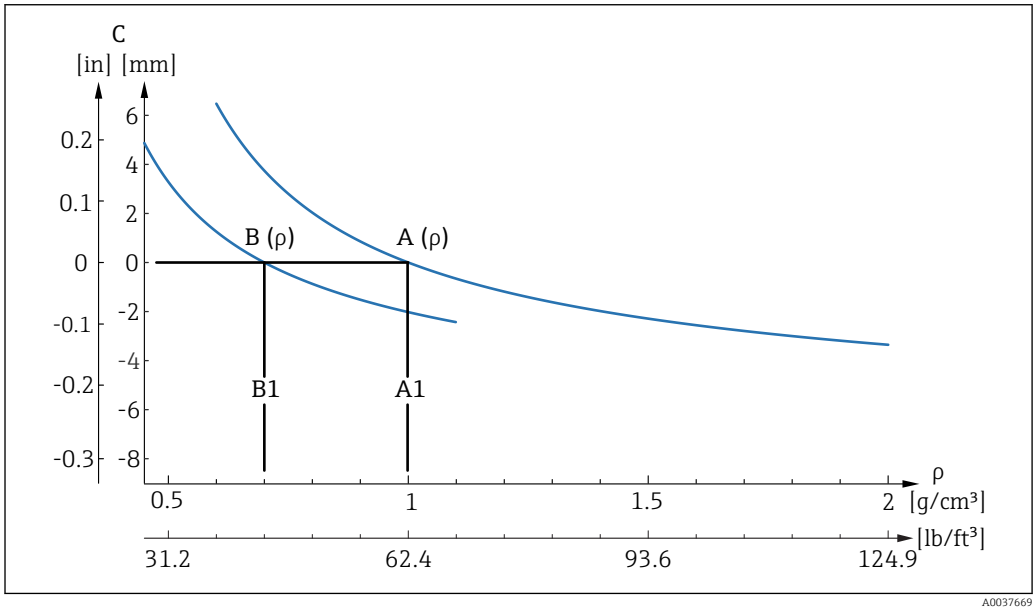

9 *Switch point deviation over density, 316L*

A Density switch setting (ρ) > 0.7 g/cm³ (43.7 lb/ft³)
A1 Reference operating condition ρ = 1 g/cm³ (62.4 lb/ft³)
B Density switch setting (ρ) > 0.5 g/cm³ (31.21 lb/ft³)
B1 Reference operating condition ρ = 0.7 g/cm³ (43.7 lb/ft³)
C Switch point deviation

Density setting
- $TC_{typ.}$, [mm/10 k]
  - $\rho > 0.7$ g/cm³ (43.7 lb/ft³): −0.2
  - $\rho > 0.5$ g/cm³ (31.21 lb/ft³): −0.2
- $Pressure_{typ.}$, [mm/10 bar]
  - $\rho > 0.7$ g/cm³ (43.7 lb/ft³): −0.3
  - $\rho > 0.5$ g/cm³ (31.21 lb/ft³): −0.4

Mounting

Mounting location, orientation

Mounting instructions
- Any orientation for compact version or version with a pipe length up to approx. 500 mm (19.7 in)
- Vertical orientation from above for device with long pipe
- Minimum distance between the tuning fork and the tank wall or pipe wall: 10 mm (0.39 in)

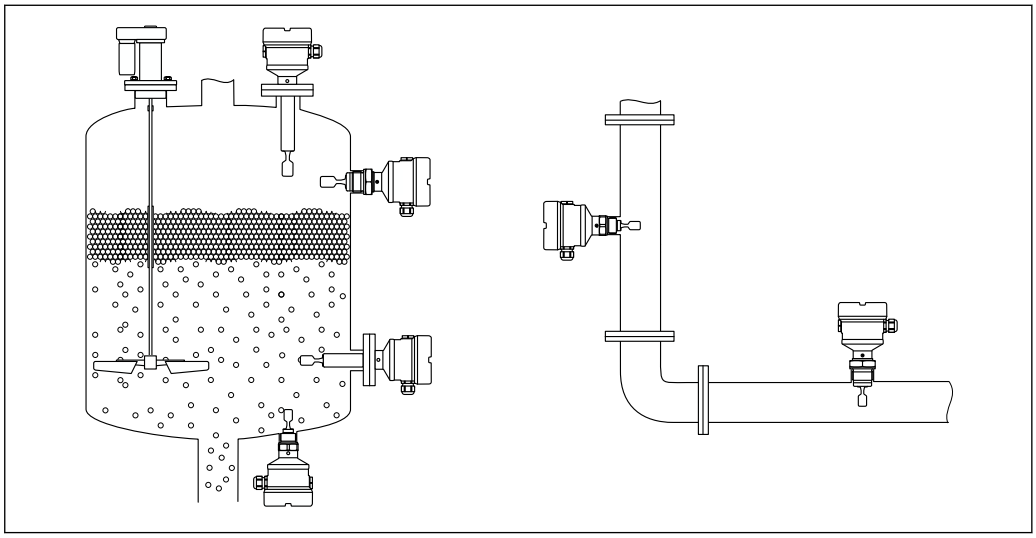

10 *Installation examples for a vessel, tank or pipe*

Installation instructions

Take viscosity into consideration

Viscosity values
- Low viscosity : < 2 000 mPa·s
- High viscosity: > 2 000 to 10 000 mPa·s

Low viscosity

Low viscosity, e.g. water: < 2 000 mPa·s

It is permitted to position the tuning fork within the installation socket.

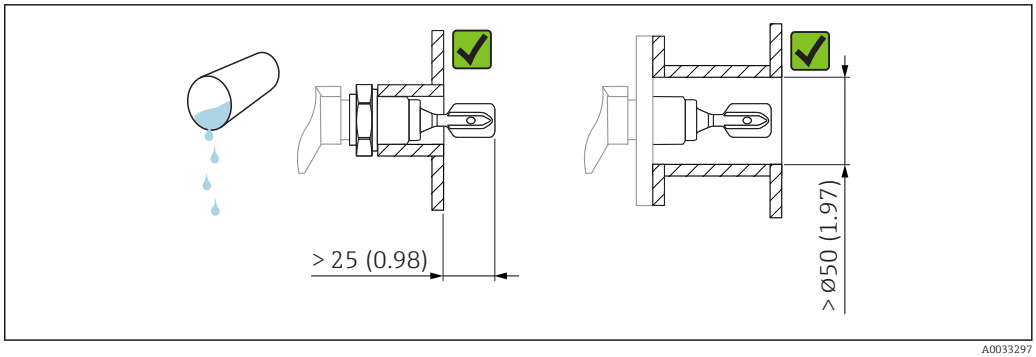

11 *Installation example for low-viscosity liquids. Unit of measurement mm (in)*

High viscosity

NOTICE

Highly viscous liquids may cause switching delays.

- ▶ Make sure that the liquid can run off the tuning fork easily.
- ▶ Deburr the socket surface.

High viscosity, e.g. viscous oils: ≤ 10 000 mPa·s

The tuning fork must be located outside the installation socket!

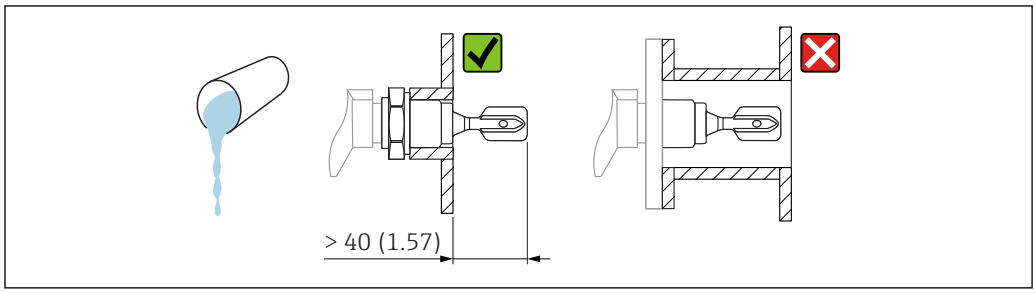

12 *Installation example for a highly viscous liquid. Unit of measurement mm (in)*

Avoid buildup

- Use short installation sockets to ensure that the tuning fork projects freely into the vessel
- Leave sufficient distance between the buildup expected on the tank wall and the tuning fork

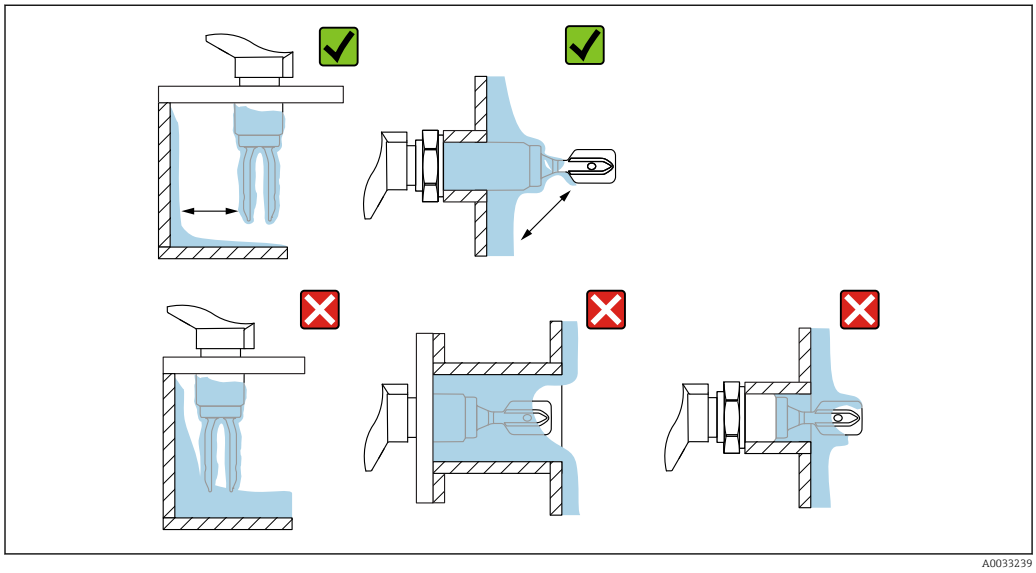

13 *Installation examples for a highly viscous process medium*

Take clearance into consideration

Allow sufficient space outside the tank for mounting, connection and settings involving the electronic insert.

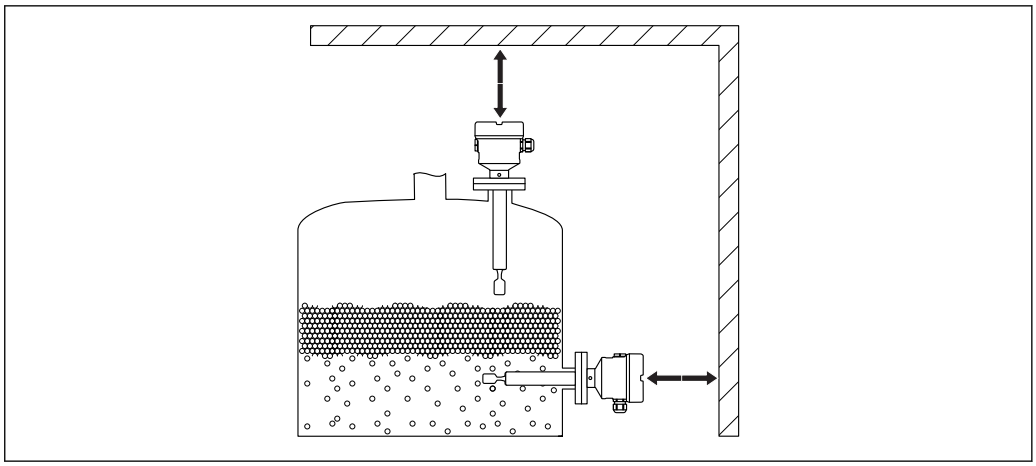

A0033236

14 *Take clearance into consideration*

Aligning the tuning fork using the marking

The tuning fork can be aligned using the marking in such a way that the medium drains off easily and buildup is avoided.

Markings are labeled on the process connection by means of:
Material specification, thread designation, circle, line or double line

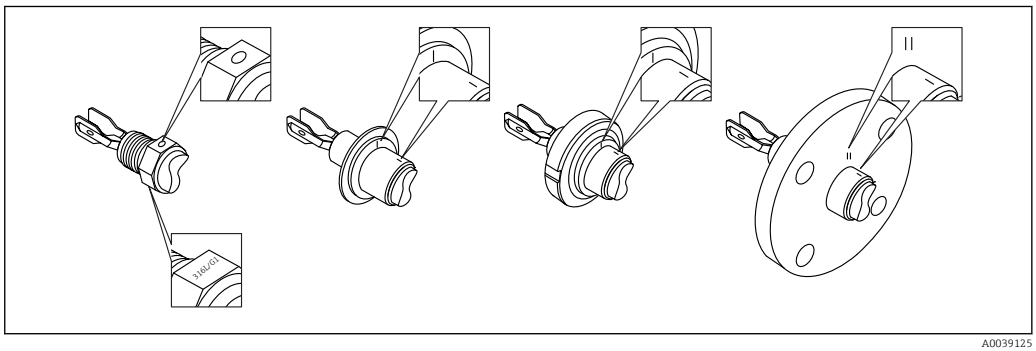

A0039125

15 *Position of the tuning fork when installed horizontally in the vessel using the marking*

Installing the device in piping

- Flow velocity up to 5 m/s with a viscosity of 1 mPa·s and density of 1 g/cm³ (62.4 lb/ft³) (SGU). Check for correct functioning in the event of other process medium conditions.
- The flow will not be significantly impeded if the tuning fork is correctly aligned and the marking is pointing in the direction of flow.
- The marking is visible when installed

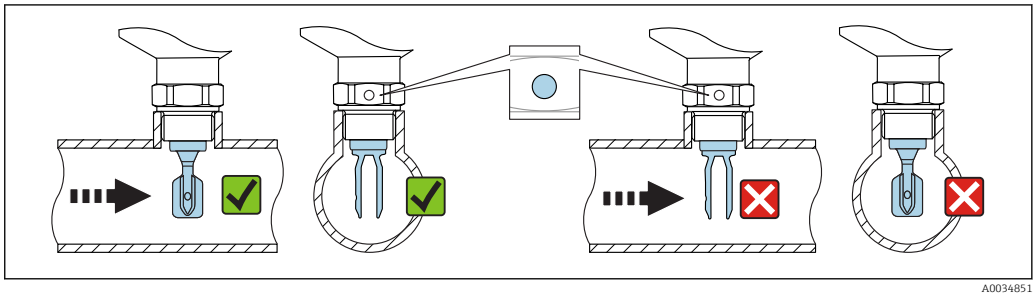

A0034851

16 *Installation in pipes (take fork position and marking into consideration)*

Aligning the cable entry

Housings with locking screw:
- The housing can be turned and the cable aligned by turning the locking screw.
- The locking screw is not tightened when the device is delivered.

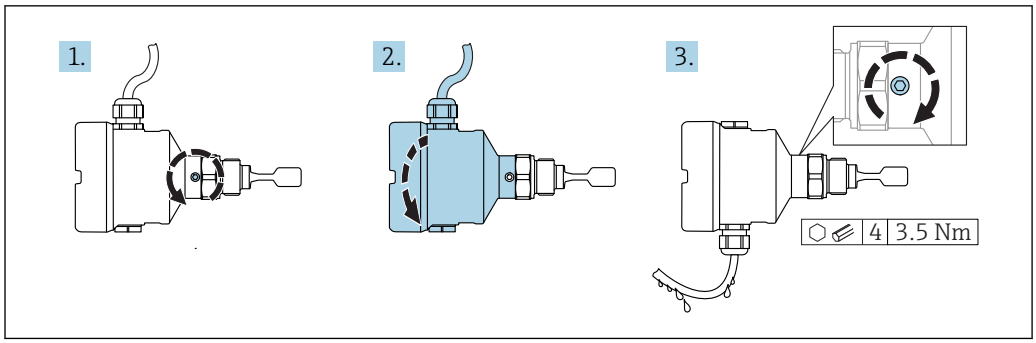

A0037347

17 *Housing with external locking screw and drip loop*

Special mounting instructions

Vessel with heat insulation

If process temperatures are high, the device should be incorporated in the usual vessel insulation system to prevent the electronics from heating as a result of thermal radiation or convection. The insulation in this case should not be higher than the neck of the device.

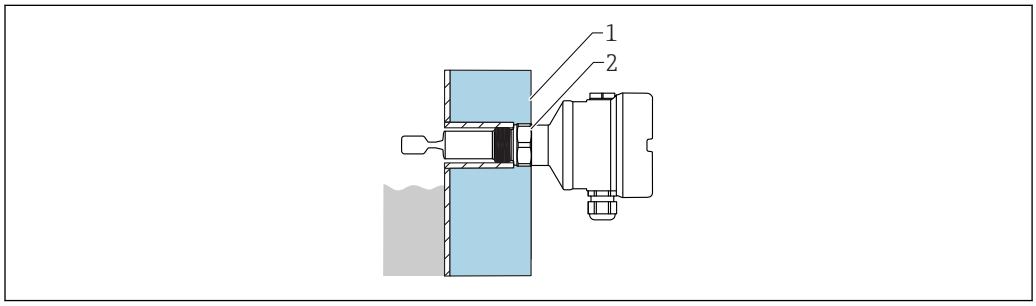

A0051616

18 *Vessel with heat insulation (example)*

1 *Vessel insulation*
2 *Insulation up to the housing neck max.*

Support the device

Support the device in the event of severe dynamic load. Maximum lateral loading capacity of the pipe extensions and sensors: 75 Nm (55 lbf ft).

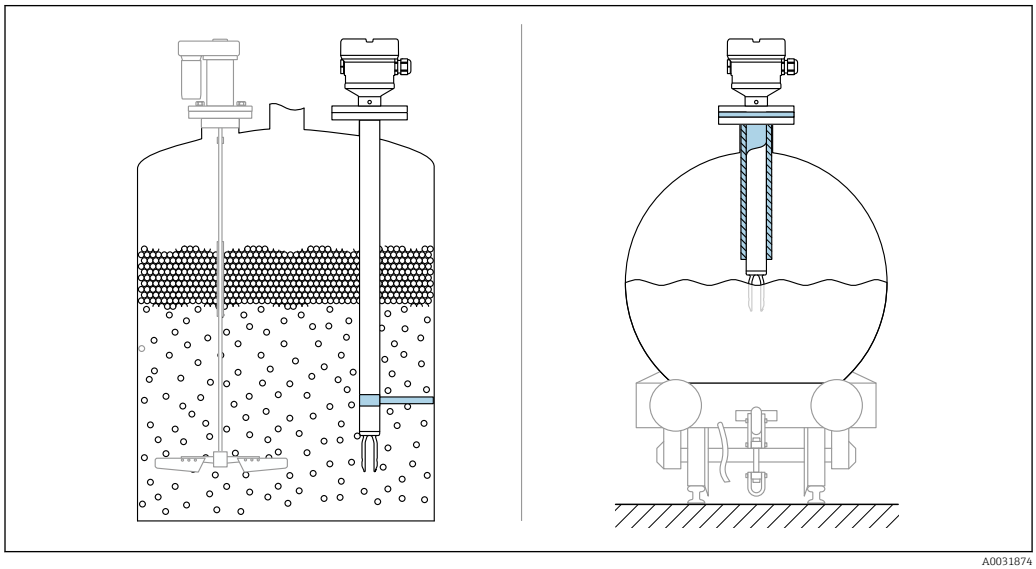

A0031874

19 *Examples of support in the event of dynamic load*

Marine approval: In the case of pipe extensions or sensors longer than 1 600 mm (63 in), a support is needed at least every 1 600 mm (63 in).

Weld-in adapter with leakage hole

Weld in the weld-in adapter in such a way that the leakage hole is pointing downwards. This enables any leaks to be detected quickly.

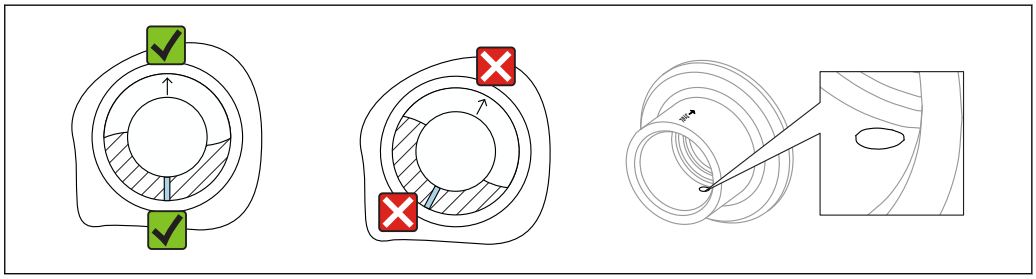

A0039230

20 Weld-in adapter with leakage hole

Sliding sleeves

For more details, see the "Accessories" section.

Environment

Ambient temperature range

−40 to +70 °C (−40 to +158 °F)

The minimum permitted ambient temperature of the plastic housing is limited to −20 °C (−4 °F); 'indoor use' applies to North America.

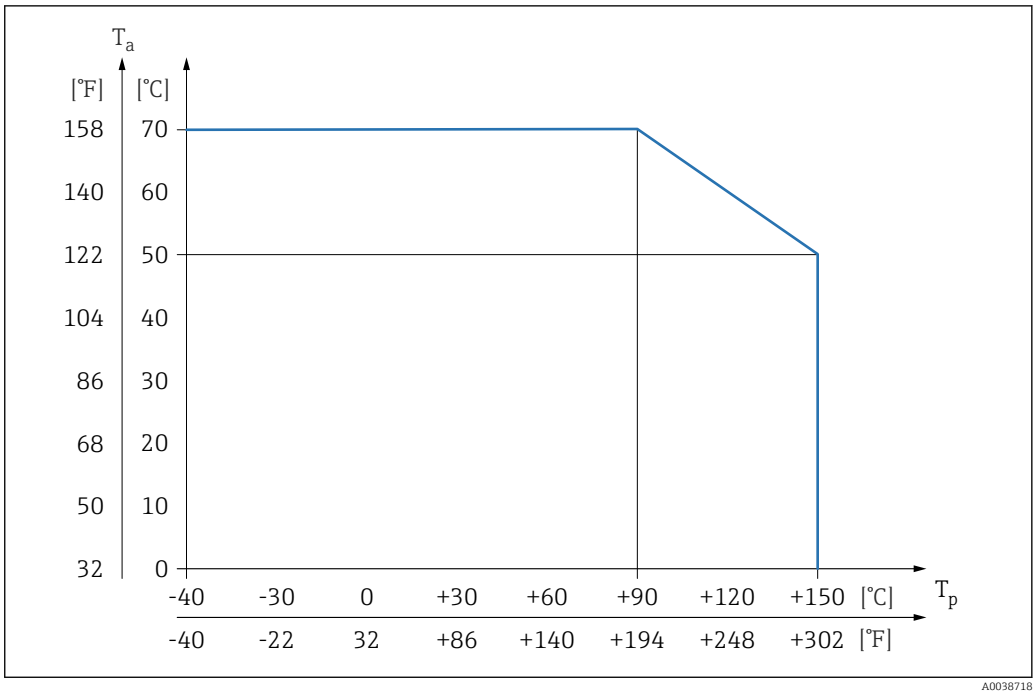

A0038718

21 For FEL44 and process temperature T_p > 90 °C max. load current 4 A

If operating outdoors in strong sunlight:
- Mount the device in a shaded location
- Avoid direct sunlight, particularly in warmer climatic regions
- Use a protective cover, can be ordered as an accessory

Hazardous area

In the hazardous area, the permitted ambient temperature can be limited depending on the zones and gas groups. Pay attention to the information in the Ex documentation (XA).

Storage temperature

−40 to +80 °C (−40 to +176 °F)

Humidity

Operation up to 100 %. Do not open in a condensing atmosphere.

Operating altitude

As per IEC 61010-1 Ed.3:
- Up to 2 000 m (6 600 ft) above sea level
- Can be extended to 3 000 m (9 800 ft) above sea level if overvoltage protection is used

Climate class

As per IEC 60068-2-38 test Z/AD

Degree of protection

Testing according to IEC 60529 and NEMA 250

IP68 test condition: 1.83 m H_2O for 24 h

Housing
See cable entries

Cable entries
- M20 threaded joint, plastic, IP66/68 NEMA Type 4X/6P
- M20 threaded joint, nickel-plated brass, IP66/68 NEMA Type 4X/6P
- G ½ thread, NPT ½, NPT ¾ IP66/68 NEMA Type 4X/6P

Degree of protection for M12 plug
- When housing is closed and connecting cable is plugged in: IP66/67 NEMA Type 4X
- When housing is open or connecting cable is not plugged in: IP20, NEMA Type 1

NOTICE

M12 plug: Loss of IP protection class due to incorrect installation!
- ▶ The degree of protection only applies if the connecting cable used is plugged in and screwed tight.
- ▶ The degree of protection only applies if the connecting cable used is specified according to IP67 NEMA Type 4X.

If the "M12 plug" option is selected as the electrical connection, **IP66/67 NEMA Type 4X** applies for all housing types.

Vibration resistance

As per IEC60068-2-64-2008
a(RMS) = 50 m/s^2, f = 5 to 2 000 Hz , t = 3 axes x 2 h

Shock resistance

In accordance with IEC60068-2-27-2008: 300 m/s^2 [= 30 g_n] + 18 ms

g_n: standard acceleration of gravity

Mechanical load

Support the device in the event of severe dynamic load. Maximum lateral loading capacity of the pipe extensions and sensors: 75 Nm (55 lbf ft).

For more details, see the "Supporting the device" section.

Pollution degree

Pollution degree 2

Electromagnetic compatibility (EMC)

- Electromagnetic compatibility as per EN 61326 series and NAMUR recommendation EMC (NE21)
- The requirements of EN 61326-3-1 are fulfilled

Process

Process temperature range

−40 to +150 °C (−40 to +302 °F)

Observe pressure and temperature dependency, see the "Process pressure range of the sensors" section.

Thermal shock

≤ 120 K/s

Process pressure range

PN: 40 bar (580 psi)

WARNING

The maximum pressure for the device depends on the lowest-rated element, with regard to pressure, of the selected component. This means that it is necessary to pay attention to the process connection as well as the sensor.

- Pressure specifications, Technical Information, "Mechanical construction" section.
- Only operate the device within the specified limits!
- The Pressure Equipment Directive (2014/68/EU) uses the abbreviation "PS". The abbreviation "PS" corresponds to the MWP (maximum working pressure) of the device.

Refer to the following standards for the permitted pressure values of the flanges at higher temperatures:

- pR EN 1092-1: With regard to its stability-temperature property, the material 1.4435 is identical to 1.4404, which is classed as 13E0 in EN 1092-1 Tab. 18. The chemical composition of the two materials can be identical.
- ASME B 16.5
- JIS B 2220

In each case, the lowest value from the derating curves of the device and the selected flange applies.

Canadian CRN approval: more details about the maximum pressure values are available in the download area of the product page under: www.endress.com→ Downloads.

Process pressure range of the sensors

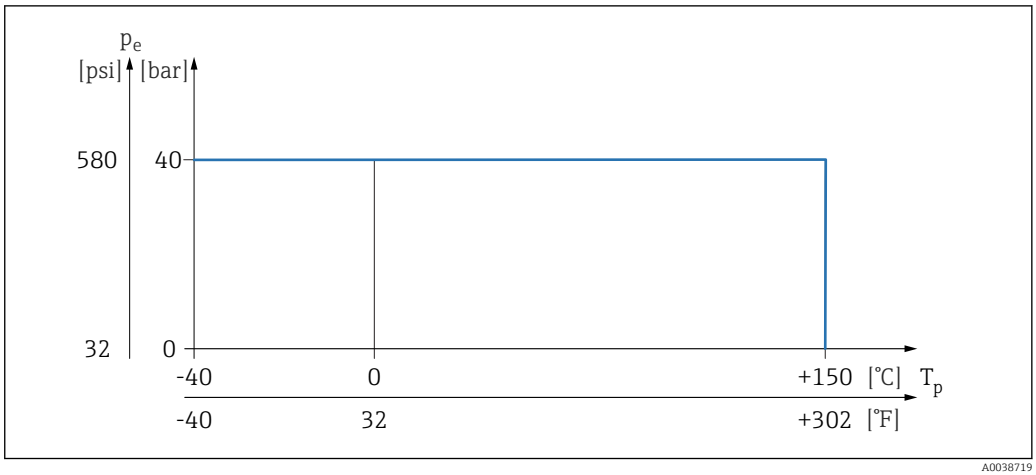

22 *Process temperature FTL41*

Overpressure limit

PN = 40 bar (580 psi): overpressure limit = 1.5 · PN maximum 60 bar (870 psi) depending on the selected process connection

The device function is limited during the pressure test.

Mechanical integrity is guaranteed up to 1.5 times the process nominal pressure PN.

Density

Liquids with density > 0.7 g/cm³ (43.7 lb/ft³)
Switch position > 0.7 g/cm³ (43.7 lb/ft³), order configuration

Liquids with density 0.5 g/cm³ (31.2 lb/ft³)
Switch position > 0.5 g/cm³ (31.2 lb/ft³), can be configured via DIP switch

Liquids with density > 0.4 g/cm³ (25.0 lb/ft³)

- Optionally available to order
- Fixed value that cannot be edited.
  The function of the DIP switch is interrupted.

Viscosity

≤ 10 000 mPa·s

Pressure tightness

Up to vacuum

In vacuum evaporation plants, select the 0.4 g/cm³ (25.0 lb/ft³)/ density setting.

Solids contents

Ø ≤ 5 mm (0.2 in)

Mechanical construction

Design, dimensions

Device height

The device height consists of the following components:
- Housing including cover
- Compact version, pipe extension or short pipe
- Process connection

The individual heights of the components can be found in the following sections:
- Determine the height of the device and add the individual heights
- Take the installation clearance into consideration (space that is needed to install the device)

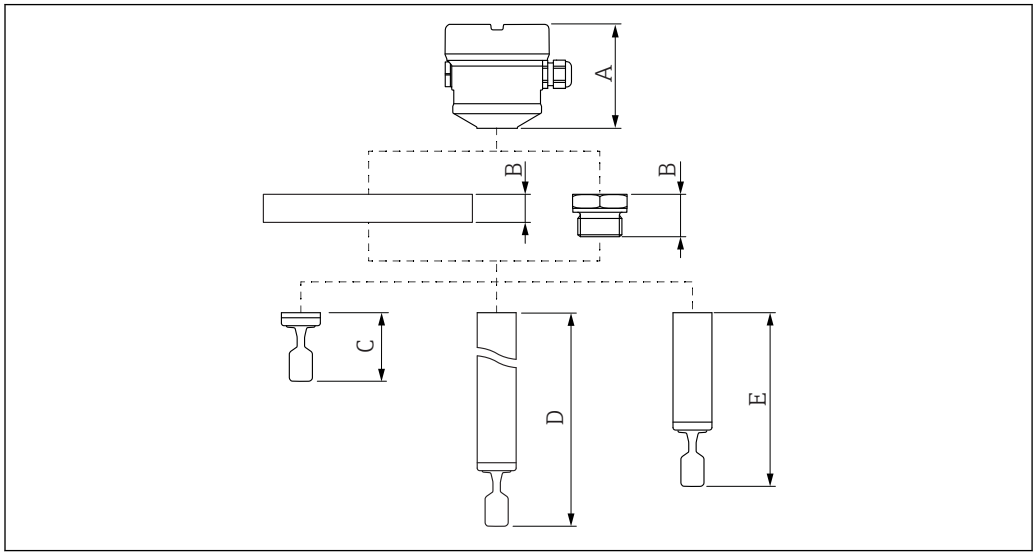

23 Components to determine the device height

A Housing including cover
B Process connection
C Compact probe version with tuning fork
D Pipe extension probe with tuning fork
E Short pipe version of probe with tuning fork

Dimensions

Housing

All housings can be aligned. The housing alignment can be fixed on housings with a locking screw.

Single compartment housing, plastic

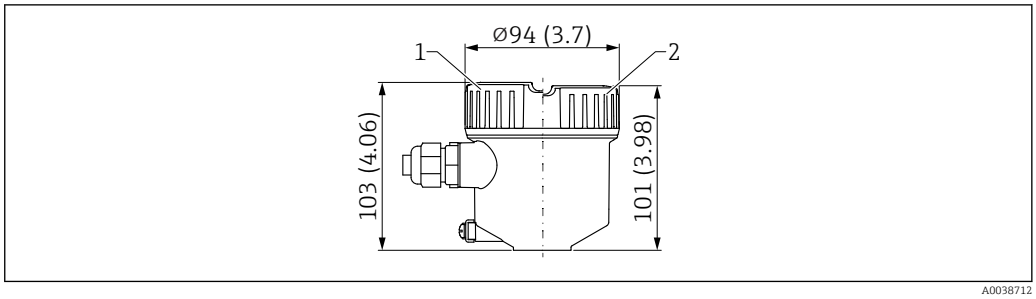

24 Dimensions of single compartment housing, plastic. Unit of measurement mm (in)

1 Height with cover with plastic sight glass (optional)
2 Height with cover without sight glass

Single compartment housing, aluminium, coated

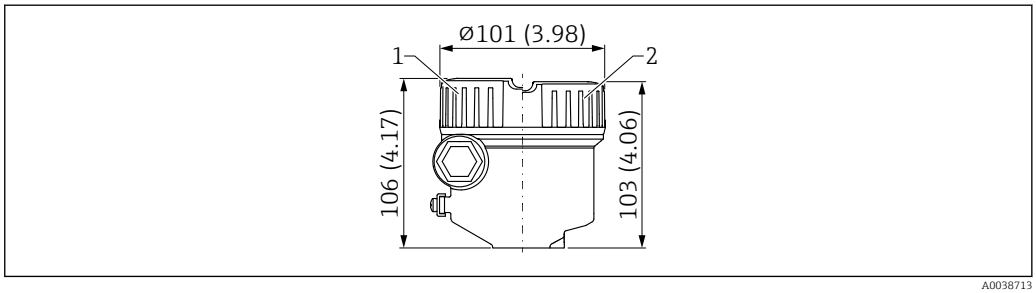

25 Dimensions of single compartment housing, aluminum, coated. Unit of measurement mm (in)

1 Height with cover with plastic sight glass (optional)
2 Height with cover without sight glass

Single compartment housing, aluminum, coated (Ex d/XP)

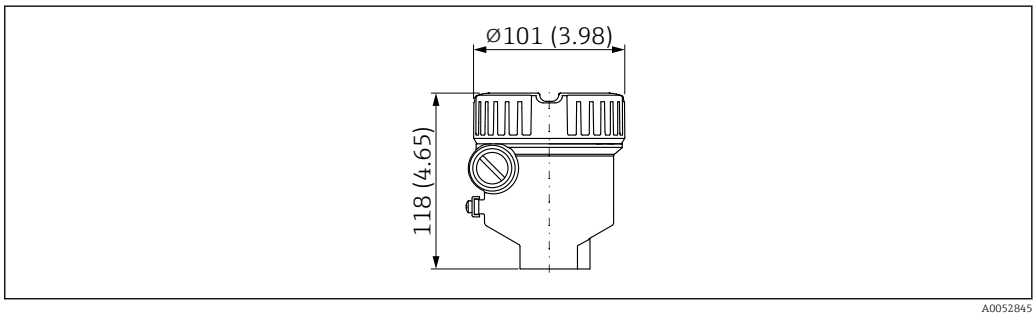

26 Dimensions of single compartment housing, aluminum, coated (Ex d/XP), cover without sight glass. Unit of measurement mm (in)

Single compartment housing, 316L, hygienic

The housing with ground terminal and cover with cover lock are required for use in hazardous areas with a certain type of protection.

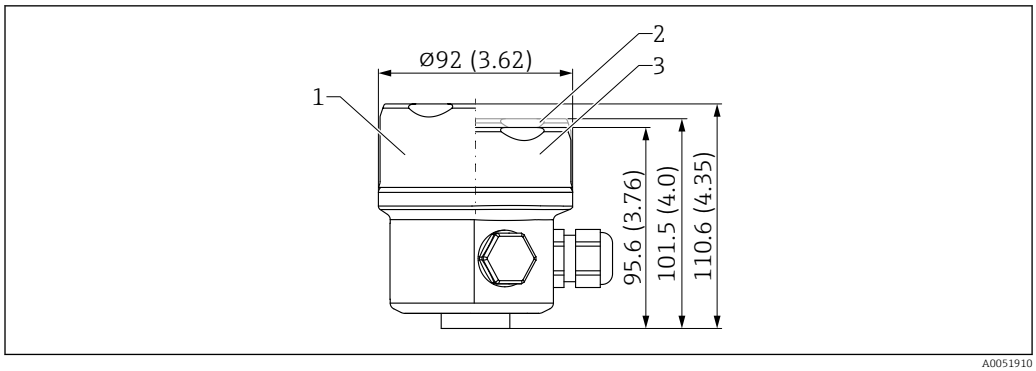

27 *Dimensions of single compartment housing, 316L, hygienic. Unit of measurement mm (in)*

1 Height with cover with sight glass made of glass (optional)
2 Height with cover with plastic sight glass (optional)
3 Cover without sight glass

Ground terminal

- Ground terminal inside the housing, max. conductor cross-section 2.5 mm² (14 AWG)
- Ground terminal outside on the housing, max. conductor cross-section 4 mm² (12 AWG)

Cable glands

Cable diameter
- Nickel-plated brass: Ø7 to 10.5 mm (0.28 to 0.41 in)
- Plastic: Ø5 to 10 mm (0.2 to 0.38 in)

The scope of delivery comprises:
- 1 cable gland installed
- 1 cable gland sealed with dummy plug

A second cable gland (not mounted) is also included in the scope of delivery of the relay electronics.

Exceptions: For Ex d/XP, dust ignition-proof, only threaded insertions are permitted.

Probe design

Compact version
Sensor length L: depends on process connection
For further details, see the "Process connections" section.

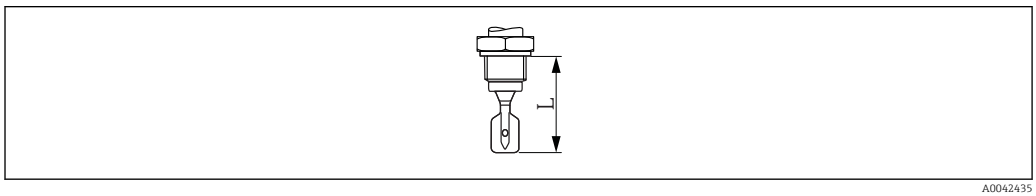

28 *Probe design: compact version, sensor length L*

Short pipe version
Sensor length L: depends on process connection
- Flange approx. 115 mm (4.53 in)
- G ¾ thread approx. 115 mm (4.53 in)
- G 1 thread approx. 118 mm (4.65 in)
- NPT thread, R approx. 99 mm (3.9 in)
- Tri-Clamp approx. 115 mm (4.53 in)

Pipe extension
- Sensor lengths L: 117 to 2 000 mm or 4.61 to 78.74 in
- Length tolerances L: < 1 m (3.3 ft) = −5 mm (−0.2 in), 1 to 3 m (3.3 to 9.8 ft) = −10 mm (−0.39 in)

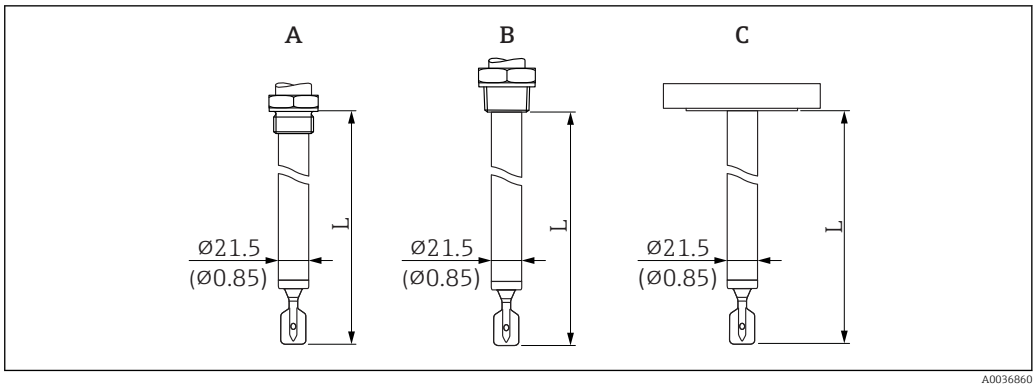

29 Probe designs: pipe extension, short pipe version, sensor length L

A G ¾, G 1
B NPT ¾, NPT 1, R ¾, R 1
C Flange, Tri-Clamp

Tuning fork

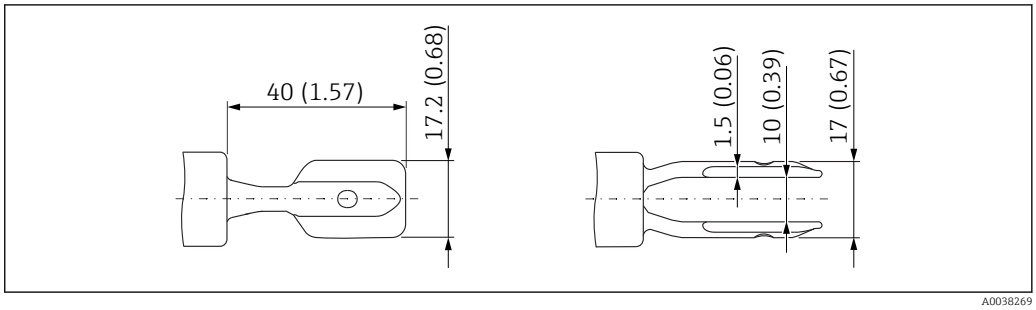

30 Tuning fork. Unit of measurement mm (in)

Process connections

Process connection, sealing surface

- Thread ISO228, G
- Thread ASME B1.20.1, NPT
- Thread EN10226, R
- Clamp/Tri-Clamp
- Flange ASME B16.5, RF (Raised Face)
- Flange EN1092-1, Form A
- Flange EN1092-1, Form B1
- Flange JIS B2220, RF (Raised Face)
- Flange HG/T20592, RF (Raised Face)
- Flange HG/T20615, RF (Raised Face)

Height of process connection

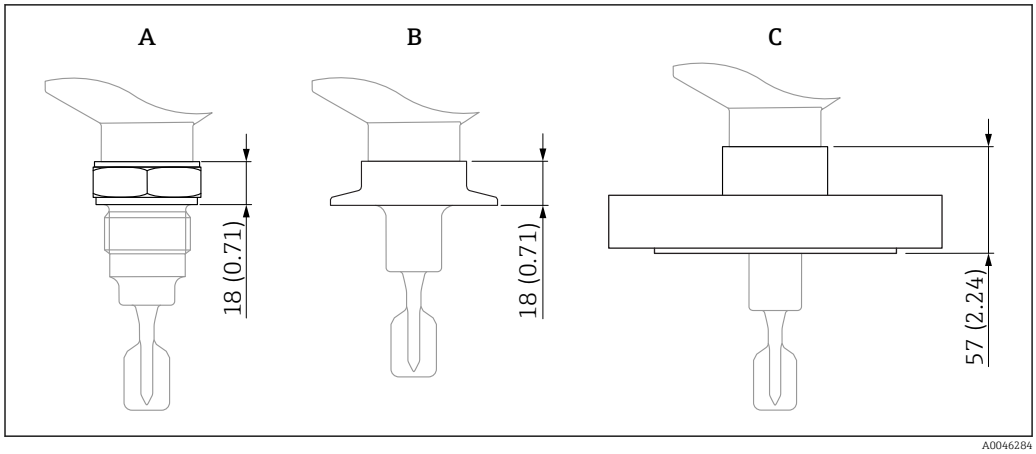

31 Maximum height specification for the process connections. Unit of measurement mm (in)

A Process connection with threaded connection
B Process connection with clamp/Tri-Clamp
C Process connection with flange

Thread ISO228 G for installing in weld-in adapter

G ¾, G 1 suitable for installation in weld-in adapter
- Material: 316L
- Pressure rating, temperature: ≤ 40 bar (580 psi), ≤ +100 °C (+212 °F)
- Pressure rating, temperature: ≤ 25 bar (363 psi), ≤ +150 °C (+302 °F)
- Weight G ¾: 0.2 kg (0.44 lb)
- Weight G 1: 0.33 kg (0.73 lb)
- Accessory: weld-in adapter

The weld-in adapter is not included in the scope of delivery. It can optionally be ordered as an accessory.

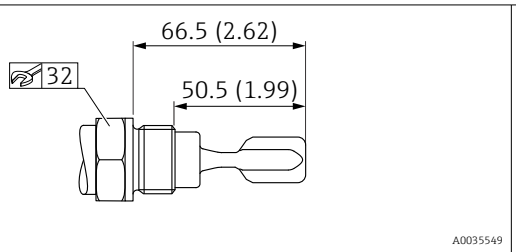

32 Thread ISO228 G ¾. Unit of measurement mm (in)

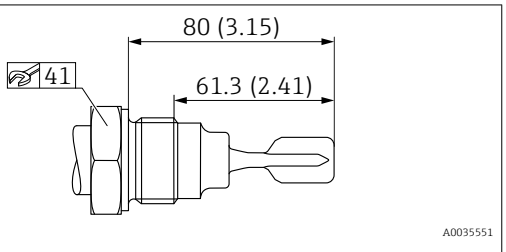

33 Thread ISO228 G 1. Unit of measurement mm (in)

Thread ISO228 G with flat seal

G ¾, G 1
- Material: 316L
- Pressure rating: ≤ 25 bar (363 psi)
- Temperature: ≤ 150 °C (302 °F)
- Weight G ¾: 0.2 kg (0.44 lb)
- Weight G 1: 0.33 kg (0.73 lb)

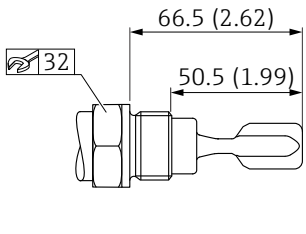

34 *Thread ISO228 G ¾. Unit of measurement mm (in)*

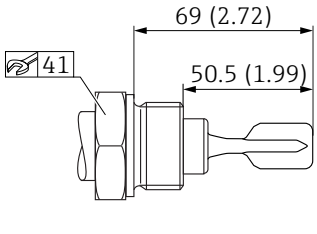

35 *Thread ISO228 G 1. Unit of measurement mm (in)*

Thread ASME B1.20.1, NPT

- Material: 316L
- Pressure rating: ≤ 100 bar (1 450 psi)
- Temperature: ≤ 150 °C (302 °F)
- Weight: 0.3 kg (0.66 lb)

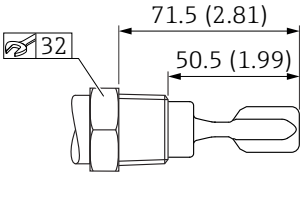

36 *Thread ASME B1.20.1, NPT ¾. Unit of measurement mm (in)*

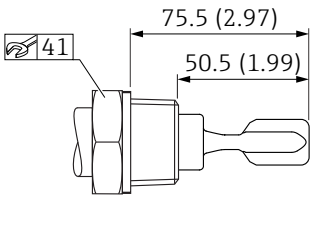

37 *Thread ASME B1.20.1, NPT 1. Unit of measurement mm (in)*

Thread EN10226, R

- Material: 316L
- Pressure rating: ≤ 100 bar (1 450 psi)
- Temperature: ≤ 150 °C (302 °F)
- Weight: 0.3 kg (0.66 lb)

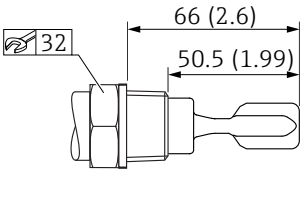

38 *Thread EN10226, R ¾. Unit of measurement mm (in)*

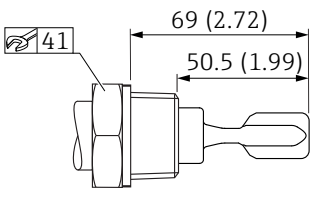

39 *Thread EN10226, R 1. Unit of measurement mm (in)*

Tri-Clamp

ISO2852 DN25-38 (1 to 1 ½"), DIN32676 DN25-40
- Material: 316L
- Pressure rating: ≤ 25 bar (363 psi)
- Temperature: ≤ 150 °C (302 °F)
- Weight: 0.22 kg (0.49 lb)

ISO2852 DN40-51 (2"), DIN32676 DN50
- Material: 316L
- Pressure rating: ≤ 25 bar (363 psi)
- Temperature: ≤ 150 °C (302 °F)
- Weight: 0.3 kg (0.66 lb)

The maximum temperature and the maximum pressure are dependent on the clamping ring and the seal used. The lowest value applies in each case.

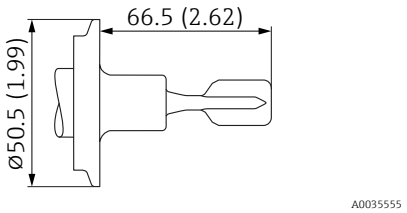

40 *Tri-Clamp 1 to 1 ½". Unit of measurement mm (in)*

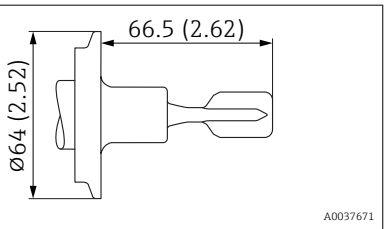

41 *2" Tri-Clamp. Unit of measurement mm (in)*

Sensor dimensions in the case of flanges

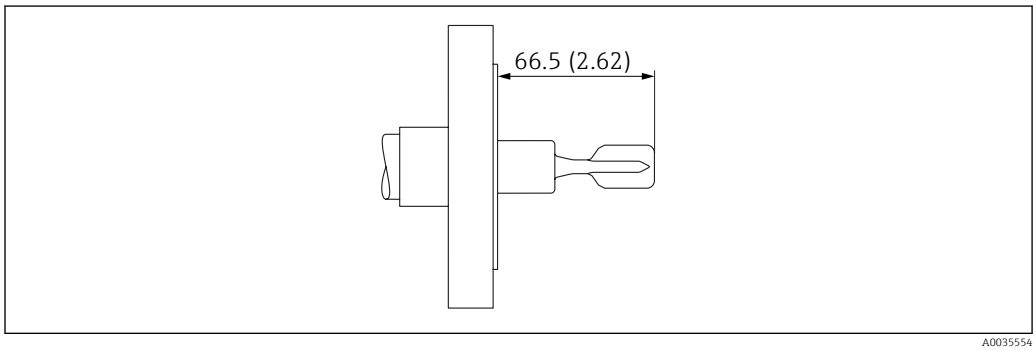

42 *Example with flange. Unit of measurement mm (in)*

ASME B16.5 flanges, RJF

Pressure rating	Type	Material	Weight
Cl.300	NPS 2"	316/316L	3.2 kg (7.06 lb)
Cl.300	NPS 4"	316/316L	11.5 kg (25.6 lb)

EN flanges EN 1092-1, A

Pressure rating	Type	Material	Weight
PN6	DN32	316L (1.4404)	1.2 kg (2.65 lb)
PN6	DN40	316L (1.4404)	1.4 kg (3.09 lb)
PN6	DN50	316L (1.4404)	1.6 kg (3.53 lb)
PN10/16	DN80	316L (1.4404)	4.8 kg (10.58 lb)
PN10/16	DN100	316L (1.4404)	5.6 kg (12.35 lb)
PN25/40	DN25	316L (1.4404)	1.3 kg (2.87 lb)
PN25/40	DN32	316L (1.4404)	2.0 kg (4.41 lb)
PN25/40	DN40	316L (1.4404)	2.4 kg (5.29 lb)
PN25/40	DN50	316L (1.4404)	3.2 kg (7.06 lb)
PN25/40	DN65	316L (1.4404)	4.3 kg (9.48 lb)
PN25/40	DN80	316L (1.4404)	5.9 kg (13.01 lb)
PN25/40	DN100	316L (1.4404)	7.5 kg (16.54 lb)
PN40	DN50	316L (1.4404)	3.2 kg (7.06 lb)

EN flanges EN 1092-1, B1

Pressure rating	Type	Material	Weight
PN6	DN32	316L (1.4404)	1.2 kg (2.65 lb)
PN6	DN50	316L (1.4404)	1.6 kg (3.53 lb)
PN10/16	DN100	316L (1.4404)	5.6 kg (12.35 lb)
PN25/40	DN25	316L (1.4404)	1.4 kg (3.09 lb)
PN25/40	DN50	316L (1.4404)	3.2 kg (7.06 lb)
PN25/40	DN80	316L (1.4404)	5.9 kg (13.01 lb)

JIS flanges B2220

Pressure rating	Type	Material	Weight
10K	10K 25A	316L (1.4404)	1.3 kg (2.87 lb)
10K	10K 40A	316L (1.4404)	1.5 kg (3.31 lb)
10K	10K 50A	316L (1.4404)	1.7 kg (3.75 lb)

Weight

Basic weight: 0.65 kg (1.43 lb)
The basic weight comprises:
- Probe design: compact version
- Electronic insert
- Housing: single compartment, plastic with cover
- Thread, G ¾

Differences in weight are caused by the housing and cover selected.

Housing
- Single compartment, aluminum, coated: 0.8 kg (1.76 lb)
- Single compartment, 316L, hygienic: 0.45 kg (0.99 lb)

Pipe extension
- 1 000 mm: 0.9 kg (1.98 lb)
- 50 in: 1.15 kg (2.54 lb)

Process connection

See "Process connections" section

Protective cover, plastic
0.2 kg (0.44 lb)

Materials

Materials in contact with process

Process connection and pipe extension

316L (1.4404 or 1.4435)

Tuning fork

316L (1.4435)

Flanges

Flanges, mechanical construction

Seals

Flat seal for process connection G ¾ or G 1: fiber-reinforced elastomer seal, asbestos-free according to DIN 7603

Scope of delivery with flat seal according to DIN7603
- Metric thread G ¾, G 1 standard
- Metric thread G ¾, G 1 for installation in weld-in adapter

Scope of delivery without seal
- Tri-Clamp
- Flanges
- R and NPT thread

Materials not in contact with process

Plastic housing

- Housing: PBT/PC
- Dummy cover: PBT/PC
- Cover seal: EPDM
- Potential equalization: 316L
- Seal under potential equalization: EPDM
- Plug: PBT-GF30-FR
- M20 cable gland: PA
- Seal on plug and cable gland: EPDM
- Threaded adapter as substitute for cable glands: 316L
- Nameplate: plastic foil
- TAG plate: plastic foil, metal or provided by customer

Aluminum housing, coated

- Housing: aluminum EN AC 43400
- Dummy cover: aluminum EN AC 43400
- Cover sealing materials: HNBR
- Plug: aluminum
  Plastic (PBT-GF30-FR) in Ex-free, Ex i or IS combination with cable gland, plastic, M20 thread or G ½ thread
- Nameplate: plastic foil
- TAG plate: plastic foil, stainless steel or provided by the customer
- M20 cable glands: select material (stainless steel, nickel-plated brass, polyamide)

Stainless steel housing, 316L, hygienic

- Housing: stainless steel AISI 316L (1.4404)
- Dummy cover: stainless steel AISI 316L (1.4404)
- Cover with polycarbonate sight glass optionally available. For dust ignition-proof applications, the sight glass is made of borosilicate.
- Cover seal materials: VMQ
- Plug: stainless steel or plastic
  - Plastic (PBT-GF30-FR) in Ex-free, Ex i or IS combination with cable gland, plastic, M20 thread or G ½ thread
  - Stainless steel for cable glands made of stainless steel or nickel or for Ex t, Ex ia IIIC
- Nameplate: stainless steel housing labeled directly
- TAG plate: plastic foil, stainless steel or provided by the customer
- M20 cable glands: select material (stainless steel, nickel-plated brass, polyamide)

Surface roughness

The surface roughness of the surface in contact with the process is Ra ≤3.2 µm (126 µin).

User interface

Operation concept

Operation with DIP switches on the electronic insert

Onsite operation

Elements on the electronic insert

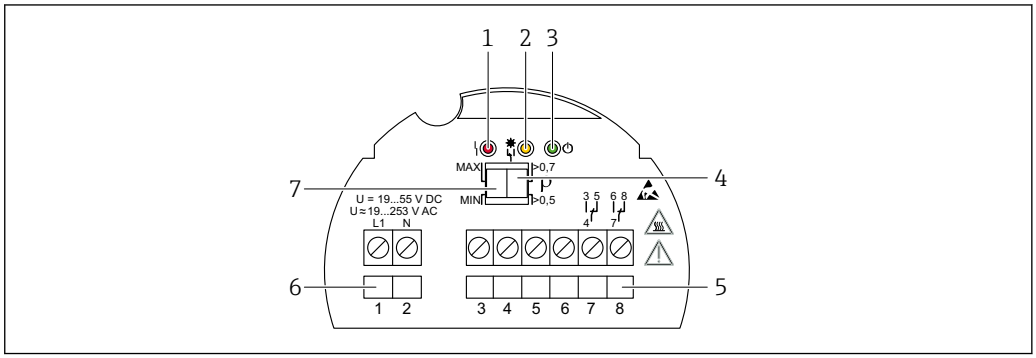

43 *Example of electronic insert FEL44*

1 *LED red, for warning or alarm*
2 *LED yellow, switch status*
3 *LED green, operational status (LED green lights up = device on)*
4 *DIP switch to set the density to 0.7 or 0.5*
5 *Relay contact terminals*
6 *Power supply terminals*
7 *DIP switch for setting MAX/MIN safety*

Operation at electronic insert

MAX/MIN fail-safe mode

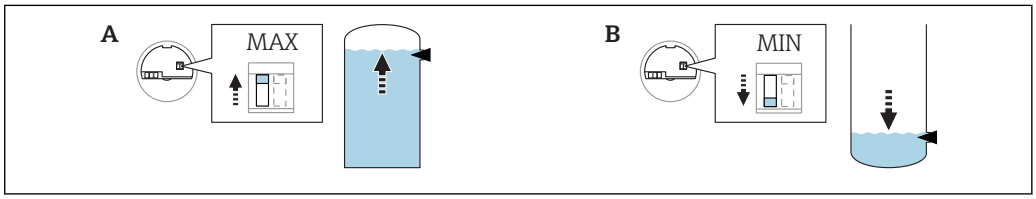

44 *Switch position on the electronic insert for fail-safe mode MAX/MIN*

A *MAX (maximum fail-safe mode)*
B *MIN (minimum fail-safe mode)*

- Minimum/maximum quiescent current safety can be switched at the electronic insert
- MAX = Maximum safety: When the tuning fork is covered, the output switches in the direction of demand. Use this for overfill prevention, for example.
- MIN = Minimum safety: When the tuning fork is uncovered, the output switches in the direction of demand. Use this for dry-running protection of pumps, for example.

Density switchover



45 *Switch position on the electronic insert for density*

Liquids with density > 0.7 g/cm³ (43.7 lb/ft³)
Switch position > 0.7 g/cm³ (43.7 lb/ft³), order configuration

Liquids with density 0.5 g/cm³ (31.2 lb/ft³)
Switch position > 0.5 g/cm³ (31.2 lb/ft³), can be configured via DIP switch

Liquids with density > 0.4 g/cm³ (25.0 lb/ft³)
- Optionally available to order
- Fixed value that cannot be edited
  The function of the DIP switch is interrupted

For information on medium differentiation/density detection: Documentation Liquiphant density (FEL60D) with density computer FML621 (Endress+Hauser website www.endress.com → Downloads)

Certificates and approvals

Current certificates and approvals for the product are available at www.endress.com on the relevant product page:

1. Select the product using the filters and search field.
2. Open the product page.
3. Select **Downloads**.

CE mark

The measuring system meets the legal requirements of the applicable EU Directives. These are listed in the corresponding EU Declaration of Conformity together with the standards applied. Endress +Hauser confirms successful testing of the device by affixing to it the CE mark.

RCM marking

The supplied product or measuring system meets the ACMA (Australian Communications and Media Authority) requirements for network integrity, interoperability, performance characteristics as well as health and safety regulations. Here, especially the regulatory arrangements for electromagnetic compatibility are met. The products bear the RCM marking on the nameplate.

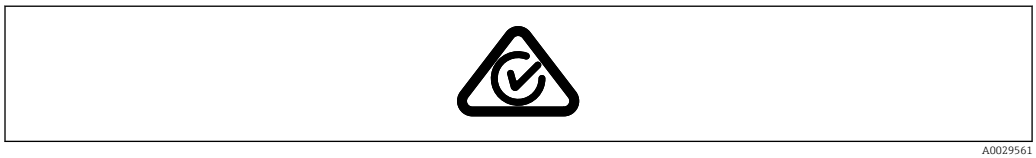

A0029561

Ex approval

All explosion protection data is listed in separate documentation which is available from the download area. The Ex documentation is supplied as standard with all Ex-systems.

General material compliance

Endress+Hauser guarantees compliance with all relevant laws and regulations, including the current guidelines for materials and substances.

Examples:
- RoHS
- China RoHS
- REACH
- POP VO (Stockholm Convention)

For further information and general declarations of compliance, see the Endress+Hauser website www.endress.com

Overfill protection

Before mounting the device, observe the documentation from the WHG approvals (German Federal Water Act).

Approved for overfill protection and leakage detection.

Product Configurator: feature "Additional approval"

Marine approvals

Product Configurator: feature "Additional approval"

CRN approval

Versions with a CRN approval (Canadian Registration Number) are listed in the corresponding registration documents. CRN-approved devices are marked with a registration number.

Any restrictions regarding the maximum process pressure values are listed on the CRN certificate.

Product Configurator: feature "Additional approval"

Service

- Cleaned of oil+grease (wetted)
- PWIS-free (paint-wetting impairment substances)
- Switching delay setting to be spec.
- Setting for MIN safety mode
- Default density setting > 0.4 g/cm³ (25.0 lb/ft³)
- Default density setting > 0.5 g/cm³ (31.2 lb/ft³)

Test, certificate, declaration

Documents available to order in the Product Configurator, feature "Test, certificate, declaration":
- Inspection certificate 3.1, EN10204 (material certificate, wetted parts)
- ASME B31.3 process piping, declaration
- ASME B31.1 process piping, declaration
- Pressure test, internal procedure, test report
- Helium leak test, internal procedure, test report
- PMI test, internal procedure (wetted parts), test report

Documentation currently available on the Endress+Hauser website: www.endress.com → Downloads or with the serial number of the device under Online Tools in the Device Viewer.

Pressure Equipment Directive

Pressure equipment with permitted pressure ≤ 200 bar (2 900 psi)

Pressure instruments with a process connection that does not have a pressurized housing do not fall within the scope of the Pressure Equipment Directive, irrespective of the maximum allowable pressure.

Reasons:

According to Article 2, point 5 of EU Directive 2014/68/EU, pressure accessories are defined as "devices with an operational function and having pressure-bearing housings".

If a pressure instrument does not have a pressure-bearing housing (no identifiable pressure chamber of its own), there is no pressure accessory present within the meaning of the Directive.

Process seal as per ANSI/ISA 12.27.01

North American practice for the installation of process seals. In accordance with ANSI/ISA 12.27.01, Endress+Hauser devices are designed as either single seal or dual seal devices with a warning message. This allows the user to waive the use of – and save the cost of installing – an external secondary process seal in the protective conduit as required in ANSI/NFPA 70 (NEC) and CSA 22.1 (CEC). These instruments comply with the North American installation practice and provide a very safe and cost-saving installation for pressurized applications with hazardous fluids. More information is provided in the Safety Instructions (XA) for the relevant device.

The following housings are approved as single seal devices:
- Single compartment, aluminum
- Single compartment, 316L stainless steel, hygienic
- Single compartment, plastic

EAC conformity

The measuring system meets the legal requirements of the applicable EAC guidelines. These are listed in the corresponding EAC Declaration of Conformity along with the standards applied.

The manufacturer confirms successful testing of the device by affixing to it the EAC mark.

ASME B 31.3/31.1

Design and materials in accordance with ASME B31.3/31.1. The welds are through-penetration welded and meet the requirements of the ASME Boiler and Pressure Vessel Code, Section IX and EN ISO 15614-1.

Ordering information

Detailed ordering information is available from your nearest sales organization www.addresses.endress.com or in the Product Configurator at www.endress.com:

1. Select the product using the filters and search field.

2. Open the product page.
3. Select **Configuration**.

Product Configurator - the tool for individual product configuration
- Up-to-the-minute configuration data
- Depending on the device: Direct input of measuring point-specific information such as measuring range or operating language
- Automatic verification of exclusion criteria
- Automatic creation of the order code and its breakdown in PDF or Excel output format
- Ability to order directly in the Endress+Hauser Online Shop

TAG

Measuring point (TAG)

The device can be ordered with a tag name.

Location of tag name
Select in the additional specification:
- Stainless steel tag plate
- Paper adhesive label
- Tag provided by the customer
- RFID tag
- RFID tag + stainless steel tag plate
- RFID tag + paper adhesive label
- RFID tag + tag provided by the customer
- IEC 61406 stainless steel tag
- IEC 61406 stainless steel tag + NFC tag
- IEC 61406 stainless steel tag, stainless steel tag
- IEC 61406 stainless steel tag + NFC, stainless steel tag
- IEC 61406 stainless steel tag, plate supplied
- IEC 61406 stainless steel tag + NFC, plate supplied

Definition of tag name
Specify in the additional specification:
3 lines of maximum 18 characters each
The specified tag name appears on the selected plate and/or on the RFID tag.

Test reports, declarations and inspection certificates

All test reports, declarations and inspection certificates are provided electronically in the *Device Viewer*:
Enter the serial number from the nameplate (www.endress.com/deviceviewer)

Product documentation on paper
Test reports, declarations and inspection certificates in hard copy can optionally be ordered with feature 570 "Service", Version I7 "Product documentation on paper". The documents are then provided with the device upon delivery.

Accessories

Protective cover for single compartment housing, aluminum or 316L

- Material: plastic
- Order number: 71438291

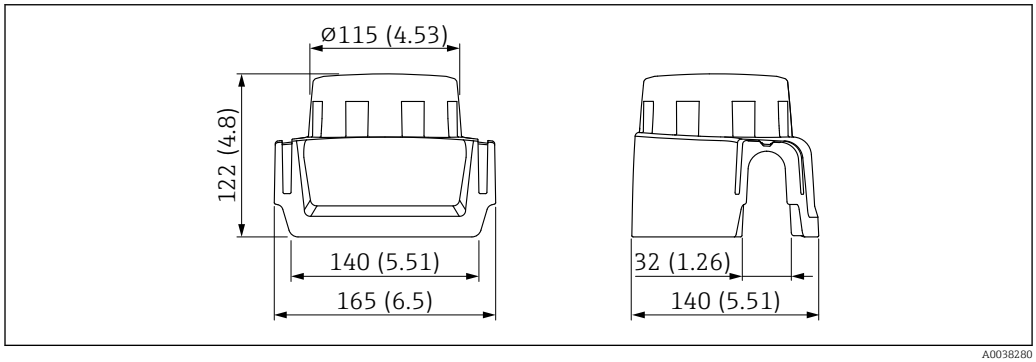

46 *Protective cover for single compartment housing, aluminum or 316L. Unit of measurement mm (in)*

M12 socket

The M12 sockets listed are suitable for use in the temperature range −25 to +70 °C (−13 to +158 °F).

M12 socket IP69
- Terminated at one end
- Angled
- 5 m (16 ft) PVC cable (orange)
- Slotted nut 316L (1.4435)
- Body: PVC
- Order number: 52024216

M12 socket IP67
- Angled
- 5 m (16 ft) PVC cable (gray)
- Slotted nut Cu Sn/Ni
- Body: PUR
- Order number: 52010285

Sliding sleeves for unpressurized operation

Not suitable for use in explosive atmospheres.

Switch point, infinitely adjustable.

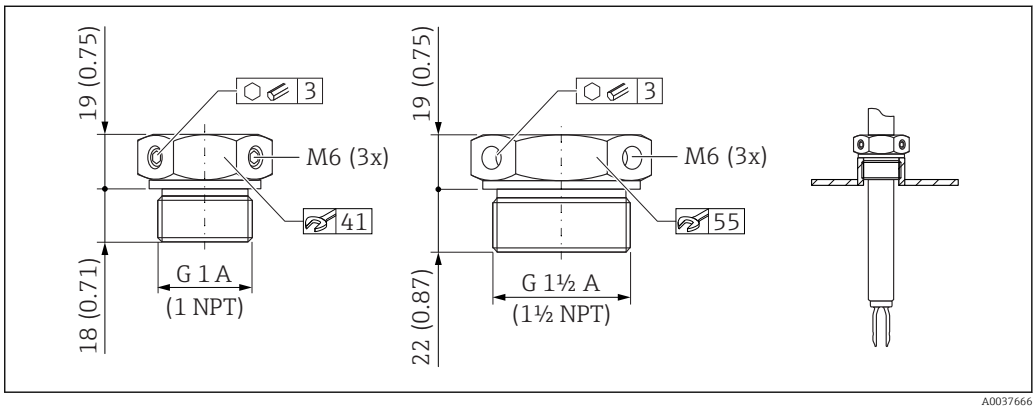

47 *Sliding sleeves for unpressurized operation p_e = 0 bar (0 psi). Unit of measurement mm (in)*

G 1, DIN ISO 228/I
- Material: 1.4435 (AISI 316L)
- Weight: 0.21 kg (0.46 lb)
- Order number: 52003978
- Order number: 52011888, approval: with inspection certificate EN 10204 - 3.1 material

NPT 1, ASME B 1.20.1
- Material: 1.4435 (AISI 316L)
- Weight: 0.21 kg (0.46 lb)
- Order number: 52003979
- Order number: 52011889, approval: with inspection certificate EN 10204 - 3.1 material

G 1½, DIN ISO 228/I
- Material: 1.4435 (AISI 316L)
- Weight: 0.54 kg (1.19 lb)
- Order number: 52003980
- Order number: 52011890, approval: with inspection certificate EN 10204 - 3.1 material

NPT 1½, ASME B 1.20.1
- Material: 1.4435 (AISI 316L)
- Weight: 0.54 kg (1.19 lb)
- Order number: 52003981
- Order number: 52011891, approval: with inspection certificate EN 10204 - 3.1 material

More detailed information and documentation are available:
- Product Configurator on the Endress+Hauser website www.endress.com
- Endress+Hauser sales organization www.addresses.endress.com

High pressure sliding sleeves

Suitable for use in explosive atmospheres.

- Switch point, infinitely adjustable
- Seal package made of graphite
- Graphite seal available as spare part 71078875
- For G 1, G 1½: seal is included in the delivery

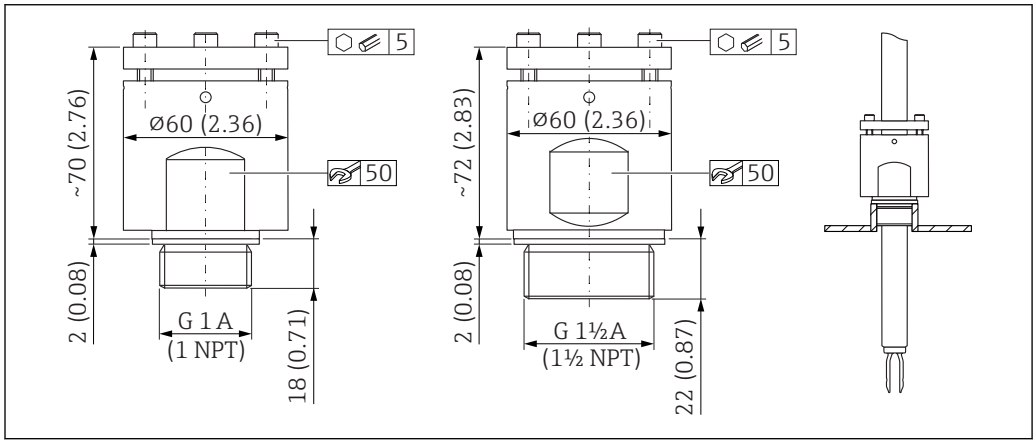

48 High pressure sliding sleeves. Unit of measurement mm (in)

G 1, DIN ISO 228/I
- Material: 1.4435 (AISI 316L)
- Weight: 1.13 kg (2.49 lb)
- Order number: 52003663
- Order number: 52011880, approval: with inspection certificate EN 10204 - 3.1 material

G 1, DIN ISO 228/I
- Material: Alloy C22
- Weight: 1.13 kg (2.49 lb)
- Approval: with inspection certificate EN 10204 - 3.1 material
- Order number: 71118691

NPT 1, ASME B 1.20.1
- Material: 1.4435 (AISI 316L)
- Weight: 1.13 kg (2.49 lb)
- Order number: 52003667
- Order number: 52011881, approval: with inspection certificate EN 10204 - 3.1 material

NPT 1, ASME B 1.20.1
- Material: Alloy C22
- Weight: 1.13 kg (2.49 lb)
- Approval: with inspection certificate EN 10204 - 3.1 material
- Order number: 71118694

G 1½, DIN ISO 228/1
- Material: 1.4435 (AISI 316L)
- Weight: 1.32 kg (2.91 lb)
- Order number: 52003665
- Order number: 52011882, approval: with inspection certificate EN 10204 - 3.1 material

G 1½, DIN ISO 228/1
- Material: Alloy C22
- Weight: 1.32 kg (2.91 lb)
- Approval: with inspection certificate EN 10204 - 3.1 material
- Order number: 71118693

NPT 1½, ASME B 1.20.1
- Material: 1.4435 (AISI 316L)
- Weight: 1.32 kg (2.91 lb)
- Order number: 52003669
- Order number: 52011883, approval: with inspection certificate EN 10204 - 3.1 material

NPT 1½, ASME B 1.20.1
- Material: Alloy C22
- Weight: 1.32 kg (2.91 lb)
- Approval: with inspection certificate EN 10204 - 3.1 material
- Order number: 71118695

More detailed information and documentation are available:
- Product Configurator on the Endress+Hauser website www.endress.com
- Endress+Hauser sales organization www.addresses.endress.com

Weld-in adapter

Various weld-in adapters are available for installation in vessels or pipes. The adapters are optionally available with inspection certificate 3.1 EN10204.

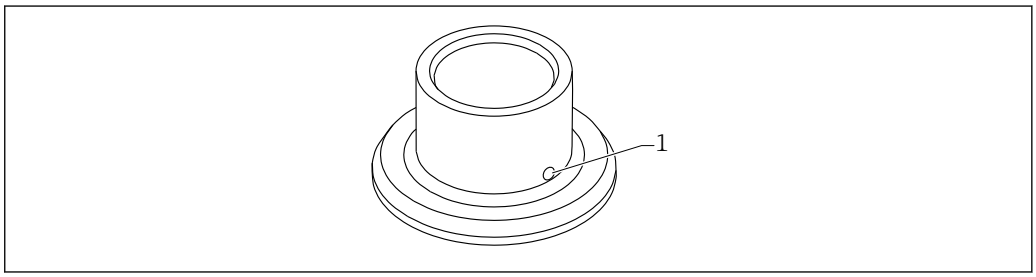

49 Weld-in adapter (sample view)

1 Leakage hole

Weld-in adapter G 1:
FDA-listed materials as per 21 CFR Part 175-178
- Ø 53 mounting on the pipe
- Ø60 flush mount on the vessel

Weld-in adapter G ¾:
FDA-listed materials as per 21 CFR Part 175-178
Ø55 flush mount

Weld in the weld-in adapter in such a way that the leakage hole is pointing downwards. This enables any leaks to be detected quickly.

For detailed information, see "Technical Information" TI00426F (Weld-in adapters, process adapters and flanges)

Available in the Downloads area of the Endress+Hauser website (www.endress.com/downloads).

Documentation

For an overview of the scope of the associated Technical Documentation, refer to the following:
- *Device Viewer* (www.endress.com/deviceviewer): Enter the serial number from the nameplate
- *Endress+Hauser Operations app*: Enter serial number from nameplate or scan matrix code on nameplate.

Standard documentation

Document type: Operating Instructions (BA)
The Operating Instructions contain all the information that is required in various phases of the life cycle of the device: from product identification, incoming acceptance and storage, to mounting, connection, operation and commissioning through to troubleshooting, maintenance and disposal.
BA01893F

Document type: Brief Operating Instructions (KA)
Quick guide to obtaining the first measured value – the Brief Operating Instructions contain all the essential information from incoming acceptance to initial commissioning.
KA01411F

Document type: Safety Instructions, certificates
Depending on the approval, safety instructions for electrical equipment in hazardous areas are also supplied with the device. They are an integral part of the Operating Instructions.
Information on the Safety Instructions (XA) that are relevant for the device is provided on the nameplate.

Supplementary device-dependent documentation

Additional documents are supplied depending on the device version ordered: Always comply strictly with the instructions in the supplementary documentation. The supplementary documentation is an integral part of the device documentation.

Special Documentation

- SD02398F: Sliding sleeve for Liquiphant (installation instructions)
- SD01622P: Weld-in adapter (installation instructions)
- TI00426F: Adapter and flanges (overview)

71624371

www.addresses.endress.com