Pressure Transmitters

Typ 4AP-30,
4AD-30,
dTRANS p30,
dTRANS p31,
4327, 4341, 4355,
4359, 4362, 4364,
4380

B 40.4300.0

Operating Instructions

04.05/00350011

1 General

M.K. JUCHHEIM GmbH & Co is a company which is certified according to ISO 9001. The pressure transmitters described below conform to the requirements of DIN and VDE. You have purchased a product which meets even the highest requirements and fulfils, or exceeds, all the specifications listed.

However, if you have any grounds for complaint, please return the instrument to us, with a detailed description of the fault.

Please read these operating instructions before starting up the instrument.

We reserve the right to make technical alterations.

If you have any suggestions for improving these operating instructions, or a product, please ring us at our main factory.

Installation notes on the pressure transmitters are included in these operating instructions. If any difficulties should still arise during commissioning or while in operation, please contact your nearest JUMO office or the main factory.

Phone: within Germany (0661) 6003-715
from abroad (+49) 661 6003-0
Fax: within Germany (0661) 6003-606
from abroad (+49) 661 6003-607
Internet: www.jumo.net

All the pressure transmitters described in these operating instructions are maintenance-free. They do not contain any components which you could repair or exchange. Repairs can only be carried out at the factory!

2 Technical description

These operating instructions do not take into account all possible applications or product variations. If you are looking for notes on your specific application, please contact the main factory.

If you need more detailed technical information on a specific instrument, please ask for the corresponding Data Sheet.

Phone (+49) 661 6003-0

Type	Data Sheet	Type	Data Sheet
dTRANS p31	40.2050	4359	40.4359
4327	40.4327	4362	40.4362
4341	40.4341	4364	40.4364
4AP-30	40.4353	dTRANS p30	40.4366
4AD-30	40.4354	4380	40.4380
4355	40.4355		

The instrument version of your pressure transmitter can be seen from the instrument label.

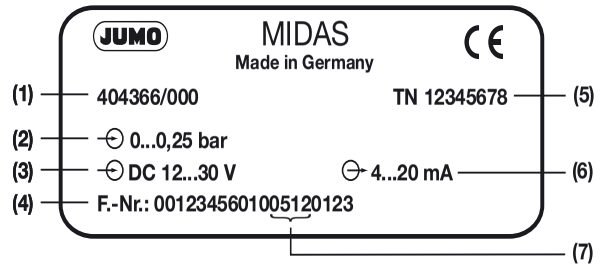

(1) Type code
(2) Range
(3) Supply
(4) Serial number
(5) Part number
(6) Output
(7) Manufacturing date (Year and week)

3 Installation

3.1 Safety note

WARNING

The device does not meet the requirements for a „Components with a safety function“ according to the Pressure Equipment Directive 97 / 23 / EC.

For hazardous substances, such as oxygen, acetylene, combustible and toxic materials, as well as in refrigeration equipment, pressure containers etc., the relevant regulations must be followed!

Ignoring these regulations can result in injury or damage to persons or property.

Only properly qualified personnel may work on this equipment.

3.2 General

The operating position of the pressure transmitter is generally unrestricted. However, in unfavourable circumstances it may falsify the measured value.

Where there are unusual measurement conditions or media (e.g. high medium temperatures or especially corrosive media), suitable pressure separators from our product range can be used. Our staff will be pleased to give professional advice.

Unless otherwise specified, JUMO pressure transmitters have been calibrated vertically with the pressure connection below, at an ambient temperature of 20 °C.

For installation in hydraulic plant it is appropriate to mount the pressure transmitter with the pressure connection above, to avoid air pockets.

When using a shut-off device, it should have a progressive opening to ensure a slow increase in pressure. Shut-off devices should be opened slowly to avoid pressure surges.

3.3 Fitting in position

The sealing faces of the pressure transmitter and the measurement point must be protected against dirt and damage. The type and form of the thread which is used at the measurement point is described on the back of the instructions. In case of doubt, please contact the main factory.

The tightening torque depends on the form and material of the seal which is used, and on the pressure connection. The tightening torque should be at least 15 Nm but not more than 200 Nm.

For pressure connections to EN 837 Form B, suitable seals are JUMO hydraulic seals to DIN 16 258 (flat), as in Data Sheet 40.9700.

For pressure connections to DIN 3852 Form E, JUMO provides the appropriate elastomer seals ex-works, ready-mounted in the pressure connection.

Pipe connections to DIN 11 851, DIN 28 403 (KF) and DIN 32 676 (clamp) include special sealing systems, which can be provided as accessories on request.

For the special pressure connections to the pressure transmitter, with the Extra Codes /117, /131 and /141, mating connections for welding are available as accessories in our product range.

The weld-in mating connection for Extra Code /44 is supplied with the package.

Taper pressure connections to American standards, such as NPT threads, are made hand-tight with a spanner. A sealing compound is used to prevent the material seizing up.

3.4 Operating conditions

- The pressure transmitter must be earthed, and protected against electrostatic discharges!
- The ambient and pressure-medium temperatures must not go beyond the limits that are given in the corresponding Data Sheet.
- As for any other sensitive measuring instrument, the pressure transmitter must not be exposed to excessively large variations in temperature. These will eventually cause changes of the zero point and the measurement span.
- Do not exceed the measurement range or the permitted overpressure.
- For highly viscous or crystallizing media which could block the pressure connection, the most suitable versions are those with a frontal diaphragm.
- The frontal diaphragm must not be deformed under any circumstances – even finger pressure can be enough to cause unacceptable deformation of the diaphragm.
- Do not insert any objects into the bore of the pressure connection.
- Do not direct a pressure jet onto the diaphragm.
- Under extreme conditions, with rapid changes of pressure and high pressure peaks, snubbers and pressure decoupling elements must be applied, to avoid pressure spikes (water hammer) which would lead to failure of the pressure transmitter.

4 Electrical connection

Pressure transmitters must only be connected by properly qualified personnel!

4.1 Assembly of the terminal box

Terminal box to DIN 43 650, Form A with Pg9 cable gland. Conductor cross-section up to 1.5 mm² max., external dia. of conductor Ø 4.5 — 7 mm, Protection IP65.

Terminal box to DIN 43 650, Form C with Pg7 cable gland. Conductor cross-section up to 0.75 mm² max., external dia. of conductor Ø 3.5 — 6 mm, Protection IP65.

The protection specified will only be achieved when the connector is firmly in position with the corresponding seal.

to open up the connector:

* Unscrew the screw (1).
* Using a small, flat screwdriver, lever the inner part (3) out of the outer part (2) (see marking on the inner part).

The inner part can be re-assembled and inserted into the outer part in 4 positions 90° apart.

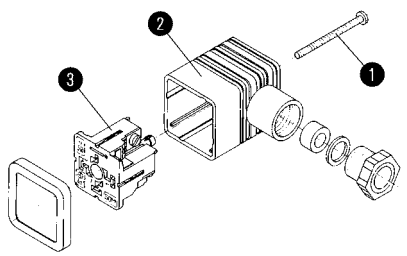

4.2 Installing the attached connecting cable

(Extra Code/73)

Minimum bending radius 120 mm (fixed cable run).

The cable must not be compressed. The end of the cable must be located in a dry room to avoid condensation. It is best to route the cable directly into a switch cabinet.

When lengthening the cable, ensure that pressure equilibration is provided while avoiding the ingress of moisture.

4.3 Block/connection diagrams

4.3.1 2-wire circuit

All components of the measuring circuit are wired in series.
(Output 4 – 20 mA)

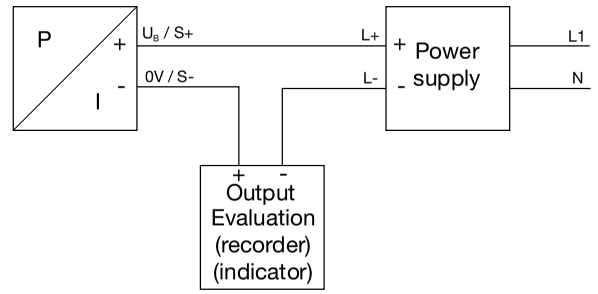

Connection with terminal box

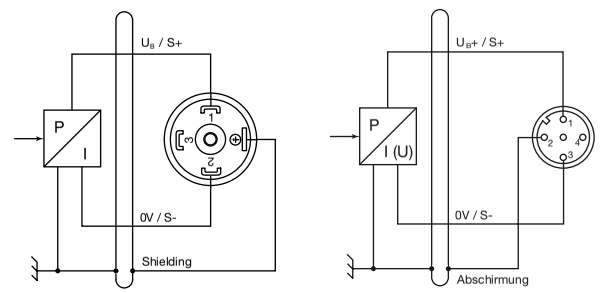

Connection with connecting cable (Extra Code /73)

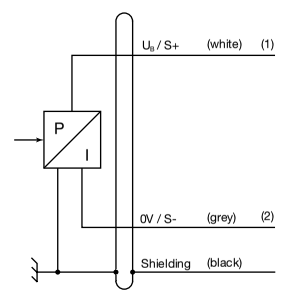

4.3.2 3-wire circuit

Common minus lead (ground) for supply voltage and measurement signal.
(Output e.g. 0 – 10 V; 0 – 20 mA; 1 – 6 V

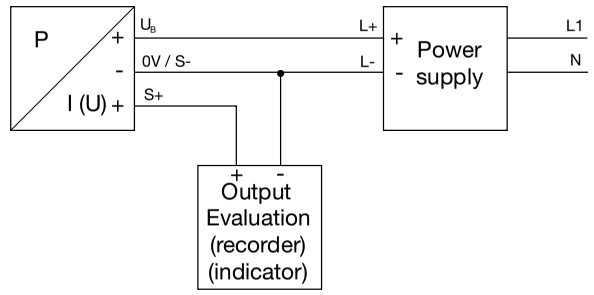

Connection with terminal box

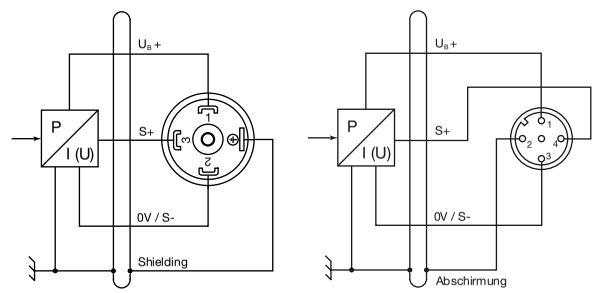

Connection with connecting cable (Extra Code /73)

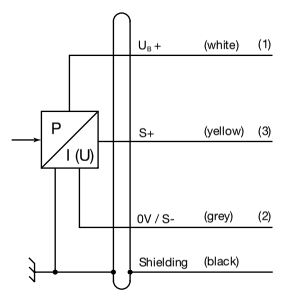

5 Trouble shooting

Type of fault	Possible cause	Handling
No output signal	No supply voltage	Check supply voltage
	Cable break, incorrect connection	Check connecting cables
	No input pressure	Check connection to the pressure medium
	Fault in pressure transmitter, caused by impermissible operating conditions	Return the pressure transmitter to the supplier, with a detailed description of the fault
Output signal stays constant, even though the pressure changes	Measurement system of the instrument has been destroyed by excessive pressure	
	Output signal from the pressure transmitter is being distorted by the current limiting, resulting from overvoltage	Provide the correct supply voltage
		Measurement range is too small – return the pressure transmitter to the supplier, with a detailed description of the fault
	Measurement point is blocked	Check measurement point, if necessary clean or replace it
Output signal too high	Selected measurement range is too low	Return the pressure transmitter to the supplier, with a detailed description of the fault
	The electronics of the pressure transmitter is faulty, or the supply voltage is too high	
Output signal too low	With current output signal: burden is too high With voltage output signal: burden is too low	Change the burden on the measurement circuit
	Supply voltage is too low	Alter the supply voltage
Zero of the output signal is wrong	Pressure transmitter measurement has shifted because of impermissible operating conditions (e.g. overpressure)	Return the pressure transmitter to the supplier, with a detailed description of the fault
Output signal characteristic is not linear		

JUMO GmbH & Co. KG
Street adress:
Moltkestrasse 13-31
36039 Fulda, Germany
Delivery adress:
Mackenrodtstrasse 14
36039 Fulda, Germany
Postal adress:
36035 Fulda, Germany
Phone: +49 661 6003 0
Fax: +49 661 6003 607
e-Mail: mail@jumo.net
Internet: www.jumo.net

JUMO Instrument Co. Ltd.
JUMO House
Temple Bank, Riverway
Harlow, Essex CM20 2TT, UK
Phone: +44 1279 635533
Fax: +44 1279 635262
e-Mail: sales@jumo.co.uk
Internet: www.jumo.co.uk

JUMO PROCESS CONTROL INC.
8 Technology Boulevard
Canastota, NY 13032, USA
Phone 315-697-JUMO
1-800-554 JUMO
Fax 315-697-5867
e-Mail info@Jumo.us
Internet: www.Jumo.us

6 Dimensions for pressure connections that are not front-flush

Pressure connection

502

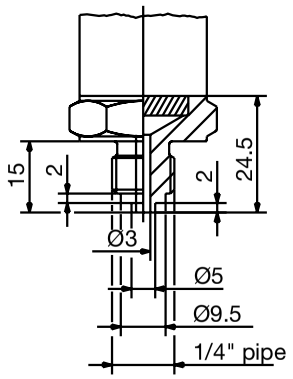

504

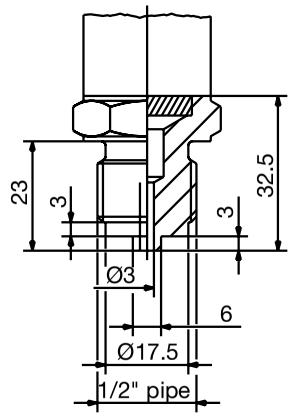

512

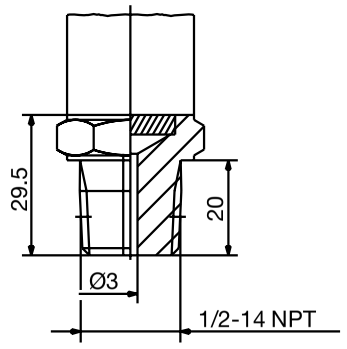

523

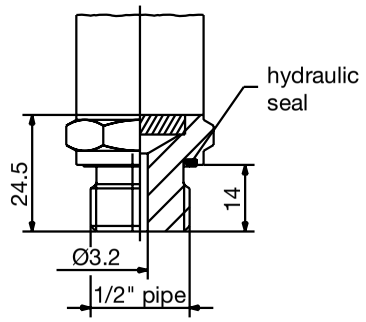

Threaded bore

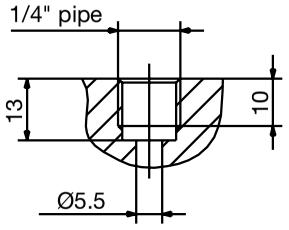

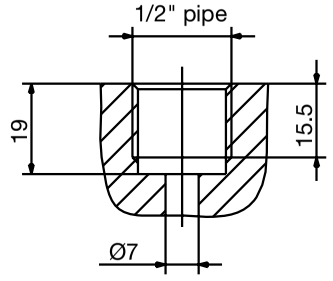

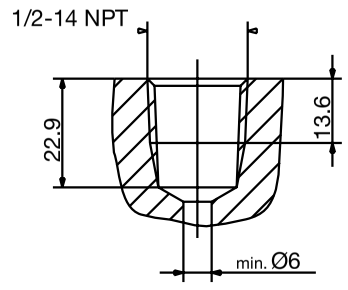

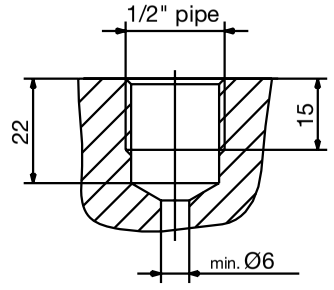

7 Dimensions for front-flush pressure connections

Pressure connection

571

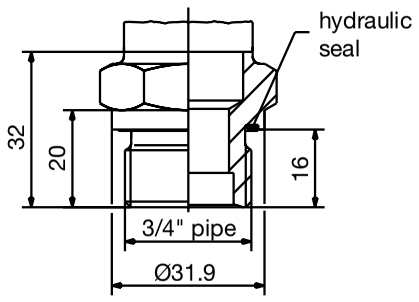

574

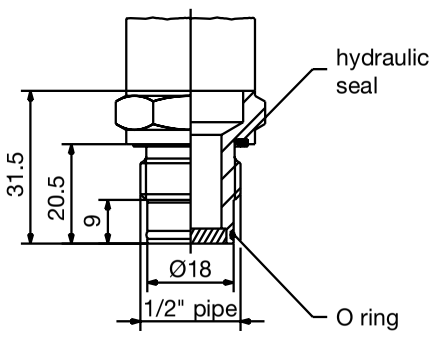

580

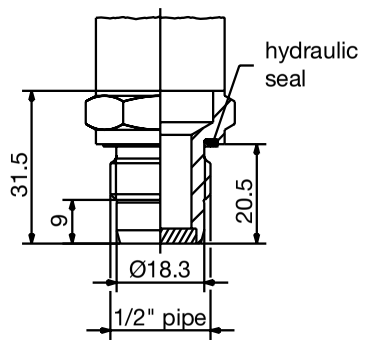

603-607

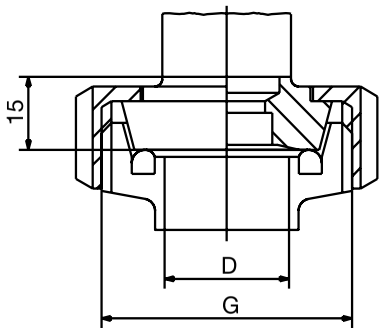

DIN 11851

DN	D	G	NTS
20	Ø20	RD 44x1/6	603
25	Ø26	RD 52x1/6	604
32	Ø32	RD 58x1/6	605
40	Ø38	RD 65x1/6	606
50	Ø50	RD 78x1/6	607

612-616

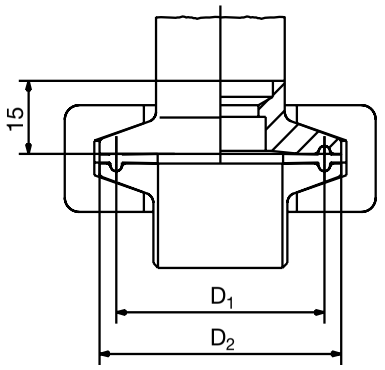

DIN 32676

DN	D_1	D_2	NTS
20	Ø27.5	Ø34	612
25	Ø43.5	Ø50.5	613
40			615
50	Ø56.5	Ø64	616

Threaded bore

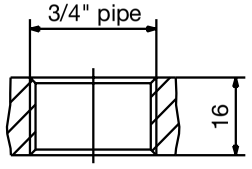

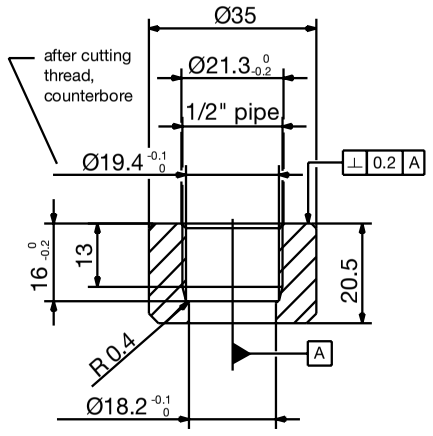

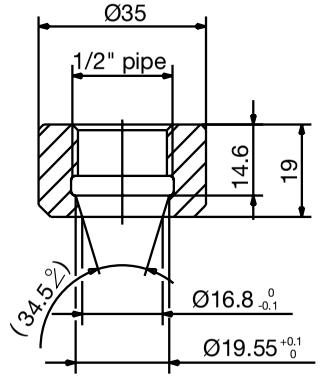

8 Service

- JUMO pressure transmitters do not require any maintenance.
- In the event of a fault, there are no components or modules which can be replaced or repaired by the user. Please return the instrument to the supplier, with a detailed description of the fault.
- Some types of pressure transmitter (Types 4AP-30, 4AD-30, 4355, 4359, 4362/23 and 4364) can be re-adjusted. We recommend that you regularly send in these pressure transmitters to the supplier, as part of your quality assurance measures.