Obstruction lights / LED Obstruction light 281

LED Obstruction light BM 24VDC RD



Part No.: 281.470.55

MECHANICAL DATA	
Height	205 mm
Diameter	165 mm
Materials	Aluminium Glass
Dome colour	Clear
Housing colour	Black Red
Protection category	IP66 IP68
Connection	Screw terminals
cross-sectional area maximum	1,50mm² / 16AWG
Cable entry	Screwed cable gland
Cable entry minimum	d = 9 mm
Tension relief	Present (conforms to VDE)
Type of fixing	Base mounting
Working temperature minimum	-30°C
Working temperature maximum	+50°C
Weight with packaging	2105 g
Product weight	1882 g

ELECTRICAL DATA	
Operating voltage	24V
Operating voltage type	DC
Operating voltage tolerance	+/- 10%
Rated operational voltage	24 VDC
Rated operational current	500 mA
Rated inrush current	2.000 mA
Protection class	Protection class 1
Pollution degree	3

OPTICAL DATA	
Light source	LED
Light colour	Red
Optical signal image	Permanent
Service life optical	50,000 h maximum

APPROVAL DATA	
Conforms with CE	Yes
WEEE	Yes
Conforms with ATEX-directive	No

! For additional installation and mounting information, refer to the appropriate user guide at www.werma.com. This printed copy is for information only and is subject to alteration.

Obstruction lights / LED Obstruction light 281

LED Obstruction light BM 24VDC RD

Conforms with CCC	No
Conforms with UL	No
Conforms with FCC	No
Conforms with IC	No
EAC certificate available	Yes
Conforms with UKCA (Importer)	Yes (WERMA (UK) Ltd.)
Conforms with AS-I	No
ICAO Certification	Yes
Conforms with DNV	No
Conforms with RoHS CN	No
Conforms with VdS	No

DRAWING

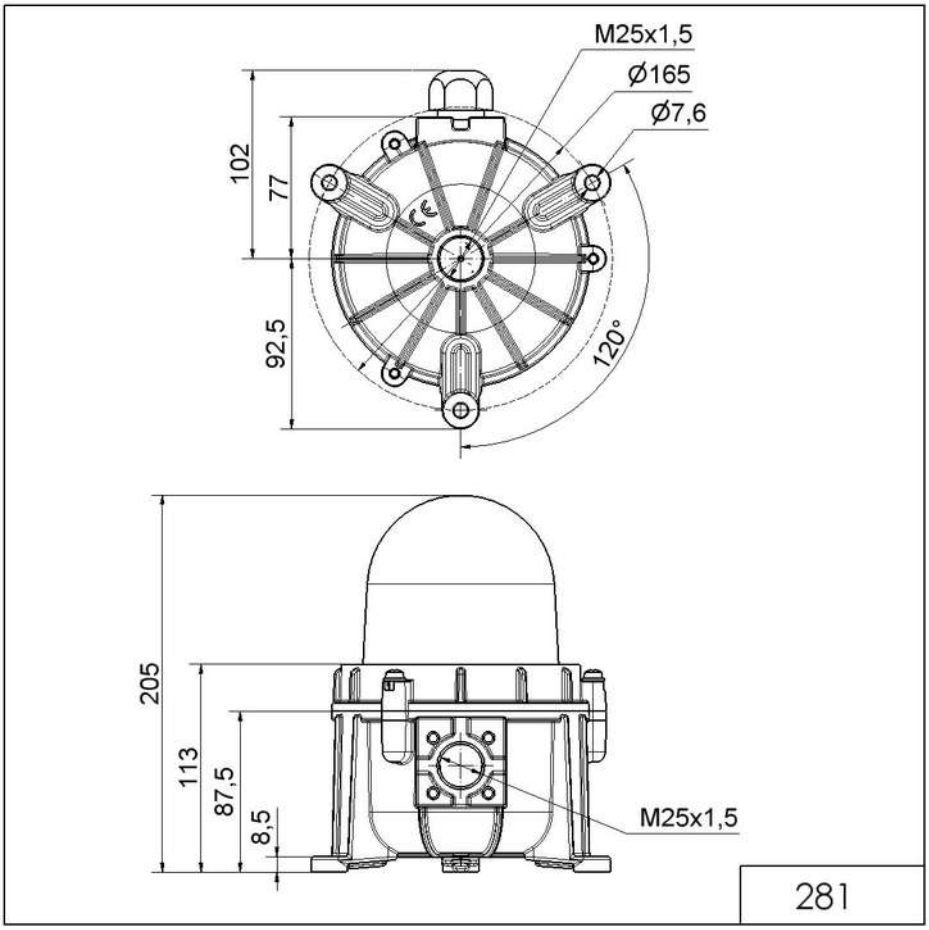

! For additional installation and mounting information, refer to the appropriate user guide at www.werma.com. This printed copy is for information only and is subject to alteration.