LR3300

Continuous level sensor (guided wave radar)

LR0000B-BN34AMPKG/US

Please see the technical note under "Downloads"
For high process temperatures: The temperature at the process connection is decisive. The actual medium temperature may be higher.

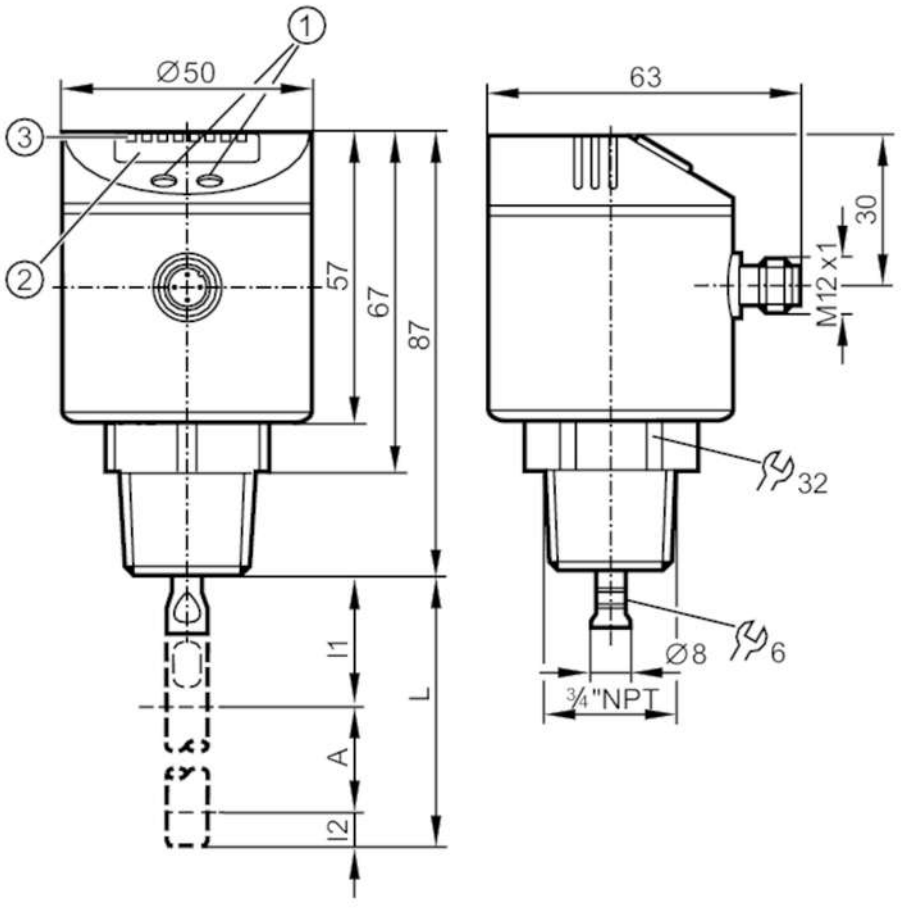

1 alphanumeric display 4-digit
2 LEDs Display unit / switching status
3 programming buttons
A active range
I1 / I2 inactive ranges

Product characteristics		
Number of inputs and outputs		Number of digital outputs: 1; Number of analogue outputs: 1
Probe length L	[mm]	100...1600
Process connection		threaded connection 3/4" NPT external thread
Application		
Special feature		Gold-plated contacts
Application		for industrial applications
Media		Liquids
Dielectric constant of the medium		≥ 5
Recommended media		water; hydrous media

LR3300

Continuous level sensor (guided wave radar)

LR0000B-BN34AMPKG/US

Cannot be used for		See the operating instructions, chapter "Function and features".	
Process temperature	[°C]	-25...80; (90 < 1 h ; see note under remarks)	
Pressure rating		16 bar	1.6 MPa
Vacuum resistance		-1000 mbar	-0.1 MPa
MAWP (for applications according to CRN)	[bar]	16	
Electrical data			
Operating voltage	[V]	18...30 DC	
Current consumption	[mA]	< 30	
Protection class		III	
Reverse polarity protection		yes	
Power-on delay time	[s]	< 3	
Measuring principle		guided wave radar	
Inputs / outputs			
Number of inputs and outputs		Number of digital outputs: 1; Number of analogue outputs: 1	
Outputs			
Total number of outputs		2	
Output signal		switching signal; analogue signal; IO-Link	
Electrical design		PNP	
Number of digital outputs		1	
Output function		normally open / normally closed; (parameterisable)	
Max. voltage drop switching output DC	[V]	2.5	
Permanent current rating of switching output DC	[mA]	200	
Number of analogue outputs		1	
Analogue current output	[mA]	4...20, invertible; (scalable)	
Max. load	[Ω]	500	
Analogue voltage output	[V]	0...10, invertible; (scalable)	
Min. load resistance	[Ω]	2000	
Short-circuit protection		yes	
Type of short-circuit protection		thermal, pulsed	
Overload protection		yes	
Measuring/setting range			
Probe length L	[mm]	100...1600	
Active range A	[mm]	L-40	
Inactive range I1 / I2	[mm]	30 / 10	
Sampling rate	[Hz]	4	
Setting range			
Set point SP	[mm]	15...L-30	
Reset point rP	[mm]	10... L-35	
In steps of	[mm]	5	
Hysteresis	[mm]	> 5	

LR3300

Continuous level sensor (guided wave radar)

LR0000B-BN34AMPKG/US

Accuracy / deviations			
Repeatability	[mm]	± 5	
Measuring error	[mm]	± 7	
Offset error	[mm]	5	
Resolution	[mm]	1	
Zero signal (voltage)	[V]	0	
Zero signal (current)	[mA]	4	
Full signal (voltage)	[V]	10	
Full signal (current)	[mA]	20	
Temperature drift per 10 K		± 0.2 %	
Interfaces			
Communication interface		IO-Link	
Transmission type		COM2 (38,4 kBaud)	
IO-Link revision		1.1	
SDCI standard		IEC 61131-9 CDV	
Profiles		no profile	
SIO mode		yes	
Required master port type		A	
Process data analogue		1	
Process data binary		1	
Min. process cycle time	[ms]	2.3	
Supported DeviceIDs		**Type of operation**	**DeviceID**
		default	345
Operating conditions			
Ambient temperature	[°C]	-25...60	
Storage temperature	[°C]	-40...85	
Protection		IP 67	
Tests / approvals			
EMC		DIN EN 61000-6-2	
		DIN EN 61000-6-3	in a closed metal tank
		DIN EN 61000-6-4	in plastic or open metal tanks
Shock resistance		DIN EN 60068-2-27	50 g (11 ms) / 25 g (6 ms) with reference rod 0.5 m
Vibration resistance		DIN EN 60068-2-6	5 g (10...2000 Hz) / 1 g (5...200 Hz) with reference rod 0.5 m
MTTF	[years]	196	
UL approval		UL Approval no.	H006
		File number UL	E174191
Mechanical data			
Weight	[g]	346.5	
Materials		stainless steel (304/1.4301); stainless steel (316L/1.4404); FKM; PBT; PC; PEI; TPE-V	
Materials (wetted parts)		stainless steel (303/1.4305); probe connection: stainless steel (316L/1.4435); PTFE; FKM	
Process connection		threaded connection 3/4" NPT external thread	

LR3300

Continuous level sensor (guided wave radar)

LR0000B-BN34AMPKG/US

Displays / operating elements		
Display	Display unit	3 x LED, green
	switching status	1 x LED, yellow
	level	alphanumeric display, 4-digit
	parameter setting	alphanumeric display, 4-digit

Remarks	
Notes	Please see the technical note under "Downloads"; For high process temperatures: The temperature at the process connection is decisive. The actual medium temperature may be higher.
Pack quantity	1 pcs.

Electrical connection

Connector: 1 x M12; coding: A; Contacts: gold-plated



Connection

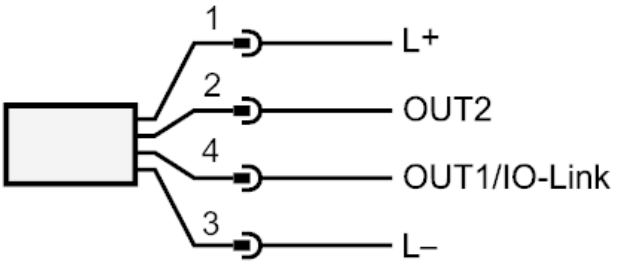

LR3300

Continuous level sensor (guided wave radar)

LR0000B-BN34AMPKG/US

Diagrams and graphs

Measurement deviation D at the limits of the active rod range

