



Model Number

OBD300-12GM40-E5-V1

Diffuse mode sensor
with 4-pin, M12 x 1 connector

Features

- Robust M12 threaded housing
- Less space required
- Light/dark ON, programmable
- Degree of protection IP67

Dimensions

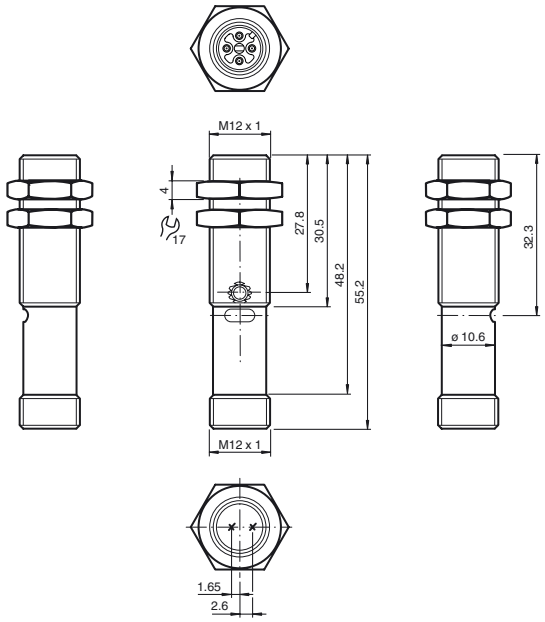

Electrical connection

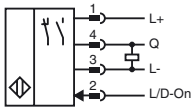

Pinout

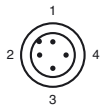

Wire colors in accordance with EN 60947-5-2

1	BN	(brown)
2	WH	(white)
3	BU	(blue)
4	BK	(black)

Indicators/operating means

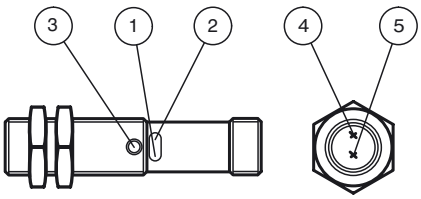

1	Operating display	green
2	Signal display	yellow
3	Potentiometer	
4	Emitter	
5	Receiver	

Release date: 2017-09-15 08:57 Date of issue: 2017-09-15 257830_eng.xml

Technical data

General specifications		
Detection range		0 ... 300 mm
Adjustment range		20 ... 300 mm
Reference target		standard white 100 mm x 100 mm
Light source		LED
Light type		red , 640 nm
Angle deviation		+/- 2 °
Diameter of the light spot		approx. 20 mm at a distance of 300 mm
Angle of divergence		approx. 4 °
Optical face		frontal
Ambient light limit		EN 60947-5-2 10000 Lux
Functional safety related parameters		
$MTTF_d$		800 a
Mission Time (T_M)		20 a
Diagnostic Coverage (DC)		0 %
Indicators/operating means		
Operation indicator		LED green: Power on
Function indicator		LED yellow ON: lights when object is detected
Control elements		Sensing range adjuster
Electrical specifications		
Operating voltage	U_B	10 ... 30 V DC , class 2
Ripple		10 %
No-load supply current	I_0	≤ 15 mA
Input		
Control input		light on +UB dark on: 0 V
Output		
Switching type		light/dark on electrically switchable
Signal output		1 PNP output, short-circuit protected, reverse polarity protected, open collector
Switching voltage		max. 30 V DC
Switching current		max. 100 mA , resistive load
Voltage drop	U_d	≤ 2 V
Switching frequency	f	≤ 1000 Hz
Response time		0.5 ms
Ambient conditions		
Ambient temperature		-30 ... 60 °C (-22 ... 140 °F)
Storage temperature		-40 ... 70 °C (-40 ... 158 °F)
Mechanical specifications		
Degree of protection		IP67
Connection		4-pin, M12 x 1 connector
Material		
Housing		brass, nickel-plated
Optical face		PMMA
Mass		approx. 15 g
Compliance with standards and directives		
Directive conformity		
EMC Directive 2004/108/EC		EN 60947-5-2:2007
Standard conformity		
Standards		UL 508

Approvals and certificates	
UL approval	cULus Listed, Class 2 Power Source, Type 1 enclosure
CCC approval	CCC approval / marking not required for products rated ≤36 V
Approvals	CE, cULus Listed 57M3 (Only in association with UL Class 2 power supply; Type 1 enclosure)

Accessories

BF 12
Mounting flange, 12 mm

BF 12-F
Mounting flange with dead stop, 12 mm

BF 5-30
Universal mounting bracket for cylindrical sensors with a diameter of 5 ... 30 mm

V1-G-2M-PUR
Female cordset, M12, 4-pin, PUR cable

V1-W-2M-PUR
Female cordset, M12, 4-pin, PUR cable

Other suitable accessories can be found at www.pepperl-fuchs.com

Release date: 2017-09-15 08:57 Date of issue: 2017-09-15 257830_eng.xml

Relative received light strength

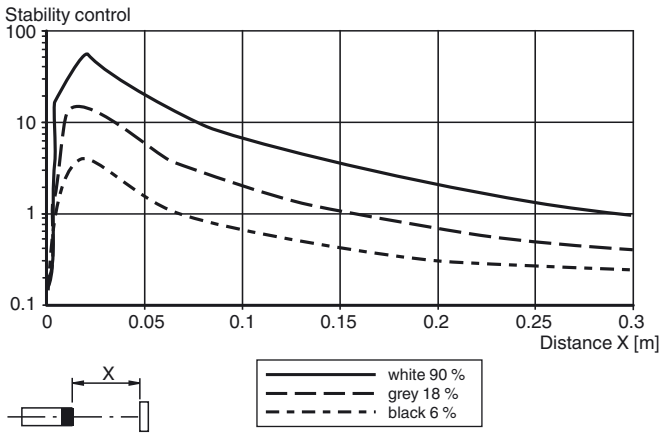

Detection ranges

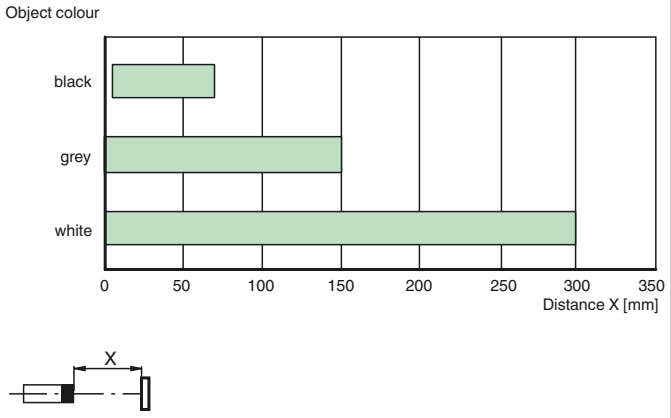

Release date: 2017-09-15 08:57 Date of issue: 2017-09-15 257830_eng.xml