Axial deep groove ball bearings

51104 (Series 511)

main dimensions to DIN 711/ISO 104, single direction, separable

The datasheet is only an overview of dimensions and basic load ratings of the selected product. Please always observe all the guidelines in these overview pages. Further information is given on many products under the menu item "Description". You can also order comprehensive information via the Catalogue selection system (http://www.fag.de/content.fag.de/en/mediathek/library/library.jsp) or by telephone on +49 (91 32) 82 - 28 97.

d	20	mm	
D	35	mm	
T	10	mm	
D_1	21	mm	
d_1	35	mm	
$D_{a\ max}$	26	mm	
$d_{a\ min}$	29	mm	
$r_{a\ max}$	0,3	mm	
r_{min}	0,3	mm	
m	0,04	kg	Mass
C_a	15000	N	Basic dynamic load rating, axial
C_{0a}	26500	N	Basic static load rating, axial
A	0,0040		Minimum load factor
n_G	10900	1/min	Limiting speed
n_B	11100	1/min	Reference speed
C_{ua}	1180	N	Fatigue limit load, axial

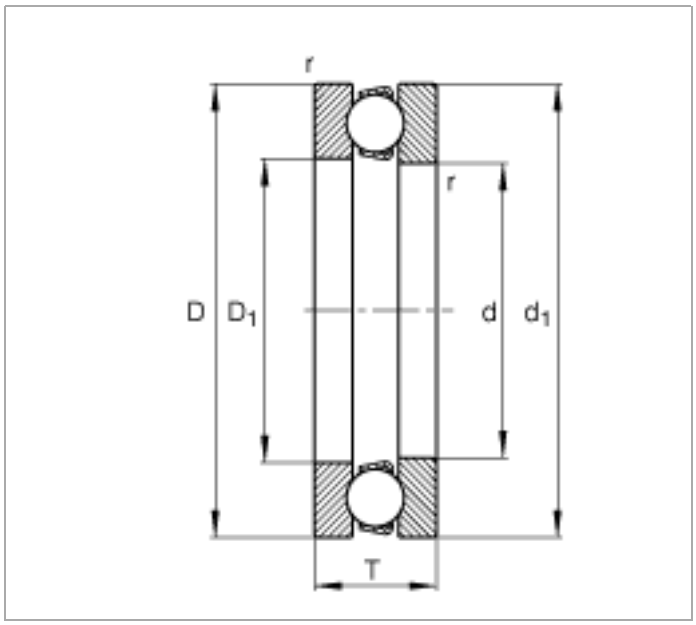
r
r
D
D1
d
d1
T

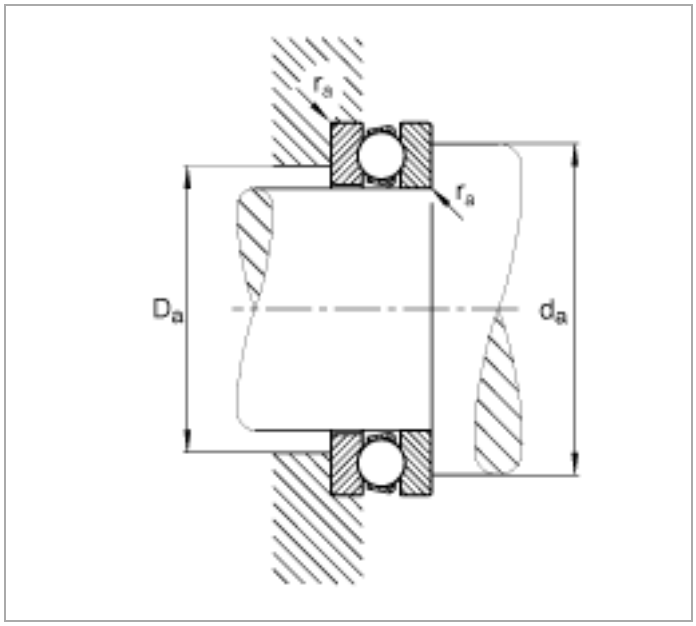
ra
ra
Da
da