Inductive
dual sensor for rotary actuators
NI4-DSU35-2Y1X2-H1140

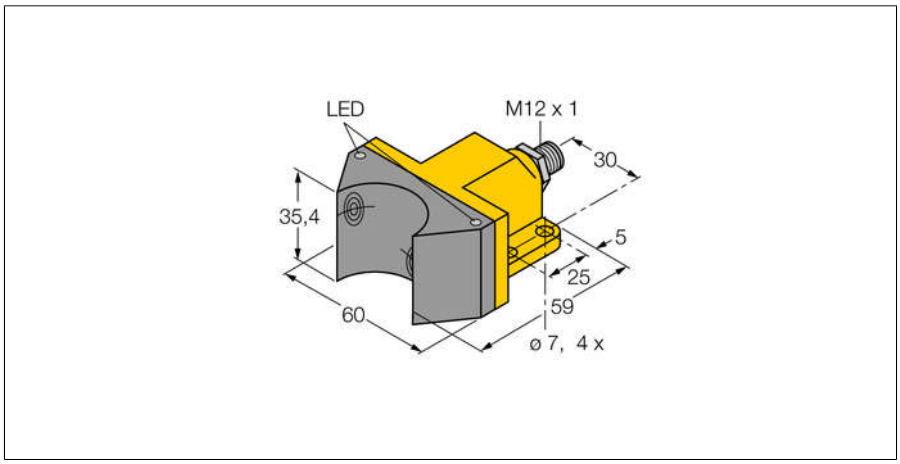

- **ATEX category II 2 G, Ex zone 1**
- **ATEX category II 1 D, Ex zone 20**
- **SIL2 as per IEC 61508**
- **Rectangular, housing DSU35**
- **Plastic, PP-GF30-VO**
- **Two outputs for monitoring the position of rotary actuators**
- **Mounting on all standard actuators**
- **DC 2-wire, nom. 8.2 VDC**
- **2 outputs acc. to DIN EN 60947-5-6 (NAMUR)**
- **Male M12 x 1**

Type code	NI4-DSU35-2Y1X2-H1140
Ident no.	1051003
Rated operating distance Sn	4 mm
Mounting condition	non-flush
Correction factors	St37 = 1; Al = 0.3; stainless steel = 0.7; Ms = 0.4
Repeatability	≤ 2 % of full scale
Temperature drift	10 %
Hysteresis	1…10 %
Ambient temperature	-25…+70 °C
Output function	4-wire, NAMUR
Valve control	Exi (max. 45 V)
Switching frequency	0.05 kHz
Voltage	Nom. 8.2 VDC
Non-actuated current consumption	≥ 2.1 mA
Actuated current consumption	≤ 1.2 mA
Approval acc. to	KEMA 02 ATEX 1090X
Internal capacitance (C_i) / inductance (L_i)	150 nF / 150 µH
Device designation	Ⓔx II 2 G Ex ia IIC T6 Gb / II 1 D Ex ia IIIC T95 °C Da
	(max. U_i = 20 V, I_i = 60 mA, P_i = 200 mW)
Warning	avoid static charging
Design	dual sensor for valve monitoring, DSU35
Dimensions	59 x 60 x 35.4 mm
Housing material	plastic, PP, yellow
Material active area	Plastic, PP, Black
Connection	male, M12 x 1
Vibration resistance	55 Hz (1 mm)
Shock resistance	30 g (11 ms)
Protection class	IP67
MTTF	6198 years acc. to SN 29500 (Ed.99) 40 °C
Switching state	LED yellow / red

Wiring diagram

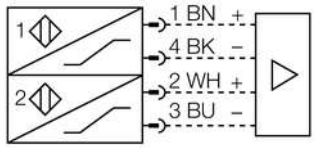

Functional principle

Inductive sensors detect metal objects contactless and wear-free. Dual sensors are especially designed for position detection in rotary actuators. They combine the reliability of non-contact inductive sensors with the flexibility of a modular housing system.

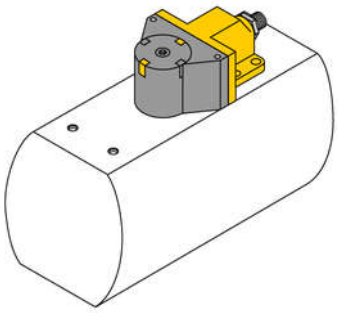

Edition • 2014-05-16T04:22:48+02:00

Inductive
dual sensor for rotary actuators
NI4-DSU35-2Y1X2-H1140

Accessories

Type code	Ident no.	Description	Dimension drawing
IMC-Di-22Ex-PNO/24VDC	7560003	Zweikanaliger Trennschaltverstärker mit M12-Steckverbinder, dezentral einsetzbar, IP67, Zone 2/22 installierbar, Eingangskreise II(1) Ex ia, PNP-Transistorausgang NO	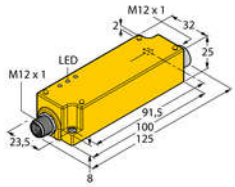
IM1-22EX-R	7541231	Isolating switching amplifier, dual-channel; 2 relay outputs NO; input NAMUR signal; selectable ON/OFF mode for wire-break and short-circuit monitoring; adjustable signal flow (NO/ NC mode); removable terminal blocks; 18 mm width; universal voltage supply unit	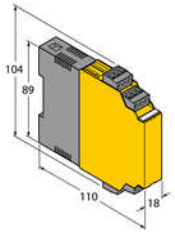
BTS-DSU35-EB1	6900225	Actuation kit (puck) for dual sensors; end position damped; hole pattern on flange surface 80 x 30 mm and 130 x 30 mm; connection shaft (shaft extension) height 20 mm / Ø max. 30 mm	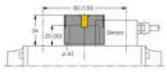
BTS-DSU35-Z01	6900229	Mounting kit dual sensors, for larger rotary actuators: Spacer plate and snap ring max. Ø 65 mm; hole pattern on flange surface 30 x 80 mm (30 x 130 mm); connection shaft (shaft extension) height 30 mm / Ø max. 30 mm	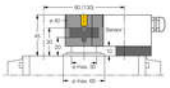
BTS-DSU35-Z02	6900230	Mounting kit dual sensors, for larger rotary actuators: Ø disc and snap ring max. 65 mm; hole pattern on flange surface 30 x 80 mm (30 x 130 mm); connection shaft (shaft extension) height 20 (30) mm / Ø max. 40 mm	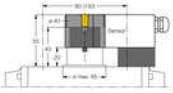

Edition • 2014-05-16T04:22:48+02:00

Accessories

Type code	Ident no.	Description	Dimension drawing
BTS-DSU35-Z03	6900231	Mounting kit dual sensors, for larger rotary actuators: Ø disc and snap ring max.110 mm; hole pattern on flange surface 30 x 130 mm; connection shaft (shaft extension) height 30 mm / Ø max. 70 mm	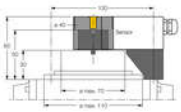
BTS-DSU35-Z07	6900403	Mounting kit dual sensors, for larger rotary actuators: Ø disc and snap ring max.110 mm; hole pattern on flange surface 30 x 130 mm; connection shaft (shaft extension) height 50 mm / Ø max. 75 mm	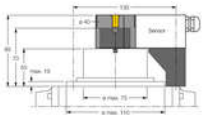
BTS-DSU35-EBE3	6901070	Actuation kit (puck) for dual sensors; end position damped; "open" and "closed" switchpoint adjustable; hole pattern on flange surface 80 x 30 mm and 130 x 30 mm; connection shaft (shaft extension) height 20 / Ø max. 30 mm	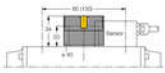
BTS-DSU35-EU2	6900455	Actuation kit (puck) for dual sensors; end position undamped for clockwise and counter-clockwise drives; hole pattern on flange surface 80 x 30 mm and 130 x 30 mm; connection shaft (shaft stud) height 20 (30) mm / Ø max. 30 mm	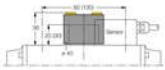

Edition • 2014-05-16T04:22:48+02:00

Inductive
dual sensor for rotary actuators
NI4-DSU35-2Y1X2-H1140

Industrial Automation

Operating manual

Intended use

This device fulfills the directive 94/9/EC and is suited for use in explosion hazardous areas according to EN60079-0:2012, -11:2012, -26:2007.
Further it is suited for use in safety-related systems, including SIL2 as per IEC 61508.
In order to ensure correct operation to the intended purpose it is required to observe the national regulations and directives.

For use in explosion hazardous areas conform to classification

II 2 G and II 1 D (Group II, Category 2 G, electrical equipment for gaseous atmospheres and category 1 D, electrical equipment for dust atmospheres).

Marking (see device or technical data sheet)

Ⓔx II 2 G acc. to Ex ia IIC T6 Gb acc. to EN60079-0 and -26 und Ⓔx II 1 D Ex ia IIIC T95°C Da acc. to EN60079-0

Local admissible ambient temperature

-25…+70 °C

Installation / Commissioning

These devices may only be installed, connected and operated by trained and qualified staff. Qualified staff must have knowledge of protection classes, directives and regulations concerning electrical equipment designed for use in explosion hazardous areas.
Please verify that the classification and the marking on the device comply with the actual application conditions.

This device is only suited for connection to approved Exi circuits compliant to EN60079-0 and -11. Please observe the maximum admissible electrical values.
After connection to other circuits the sensor may no longer be used in Exi installations. When interconnected to (associated) electrical equipment, it is required to perform the "Proof of intrinsic safety" (EN60079-14).
When employed in safety systems to IEC 51408 it is required to assess the failure probability (PFD) of the complete circuitry.

Installation and mounting instructions

Avoid static charging of cables and plastic devices. Please only clean the device with a damp cloth. Do not install the device in a dust flow and avoid build-up of dust deposits on the device.
If the devices and the cable could be subject to mechanical damage, they must be protected accordingly. They must also be shielded against strong electro-magnetic fields.
The pin configuration and the electrical specifications can be taken from the device marking or the technical data sheet.
In order to avoid contamination of the device, please remove possible blanking plugs of the cable glands or connectors only shortly before inserting the cable or opening the cable socket.

Special conditions for safe operation

avoid static charging

service / maintenance

Repairs are not possible. The approval expires if the device is repaired or modified by a person other than the manufacturer. The most important data from the approval are listed.

Edition • 2014-05-16T04:22:48+02:00