Product Data Sheet

9204305004
VWC0080ASJAS
AC 8300 H

ebmpapst
The engineer's choice



GREEN TECH

AC 8300 H

INDEX

1 General 3
2 Mechanics 3
2.1 General 3
2.2 Connections 3
3 Operating Data 4
3.1 Electrical Interface - Input 4
3.2 Electrical Operating Data 4
3.3 Electrical Features 5
3.4 Aerodynamics 6
3.5 Sound Data 7
4 Environment 8
4.1 General 8
4.2 Climatic Requirements 8
5 Safety 9
5.1 Electrical Safety 9
5.2 Approval Tests 9
6 Reliability 10
6.1 General 10

1 General

Fan type	Fan
Rotating direction looking at rotor	Counterclockwise
Airflow direction	Air outlet over struts
Bearing system	Ball bearing
Mounting position - shaft	Any

2 Mechanics

2.1 General

Width	80,0 mm	
Height	80,0 mm	
Depth	32,0 mm	
Diameter	0,0 mm	
Mass	0,325 kg	
Housing material	Plastic	
Impeller material	Plastic	

2.2 Connections

Electrical connection	Wires	
Lead wire length Tolerance	L = 500 mm +- 10,0 mm	
Tube length Tolerance	S = 15 mm +- 5 mm	
Wire size (AWG)	22	
Insulation diameter	1,5 mm	
Plug	See drawing	
Contact	See drawing	





Wire	Color	Operation
1	black	L1
2	black	L2

3 Operating Data

3.1 Electrical Interface - Input

External voltage supply for input and output signals must be SELV conform.

Control input	None

Features

3.2 Electrical Operating Data

Features	Condition	Symbol	Values			
Voltage range Tolerance		U	85 V			265 V
Nominal voltage		U_N		115	230 V	
Frequency		f	50 Hz / 60 Hz			
Power consumption Tolerance	Δp = 0	P	8 W +- 20 %			
Current consumption Tolerance	Δp = 0	I_{RMS}	150 mA +- 20 %	95 mA +- 25 %	72 mA +- 20 %	70 mA +- 25 %
Speed Tolerance	Δp = 0	n	5.000 1/min +- 10 %			

3.3 Electrical Features

Electronic function	None	
Locked rotor protection	Auto restart	
Clock signal at locked rotor	t_3/t_4 typical: 0,4 s / 10 s	

3.4 Aerodynamics

Measurement conditions:

Measured with a double chamber intake rig acc. to DIN EN ISO 5801.
Normal air density = 1,2 kg/m3; Temperature 23℃ +/ - 3℃;
In the intake and outlet area should not be any solid obstruction within 0,5 m. Motor shaft horizontal.
The information is only valid under the specified test conditions and may be changed by the installation conditions. If there are deviations from the standard test conditions, the characteristic values must be checked under the installed conditions.

a) Operation condition:
5.000 1/min at free air flow Frequency: 50 Hz Nominal voltage: 230 V

Max. free-air flow (Δp = 0 / $\dot{V}$ = max.)	80,0 m3/h
Max. static pressure (Δp = max. / $\dot{V}$ =0)	125 Pa

b) Operation condition:
5.000 1/min at free air flow Frequency: 60 Hz Nominal voltage: 115 V

Max. free-air flow (Δp = 0 / $\dot{V}$ = max.)	80,0 m3/h
Max. static pressure (Δp = max. / $\dot{V}$ =0)	125 Pa

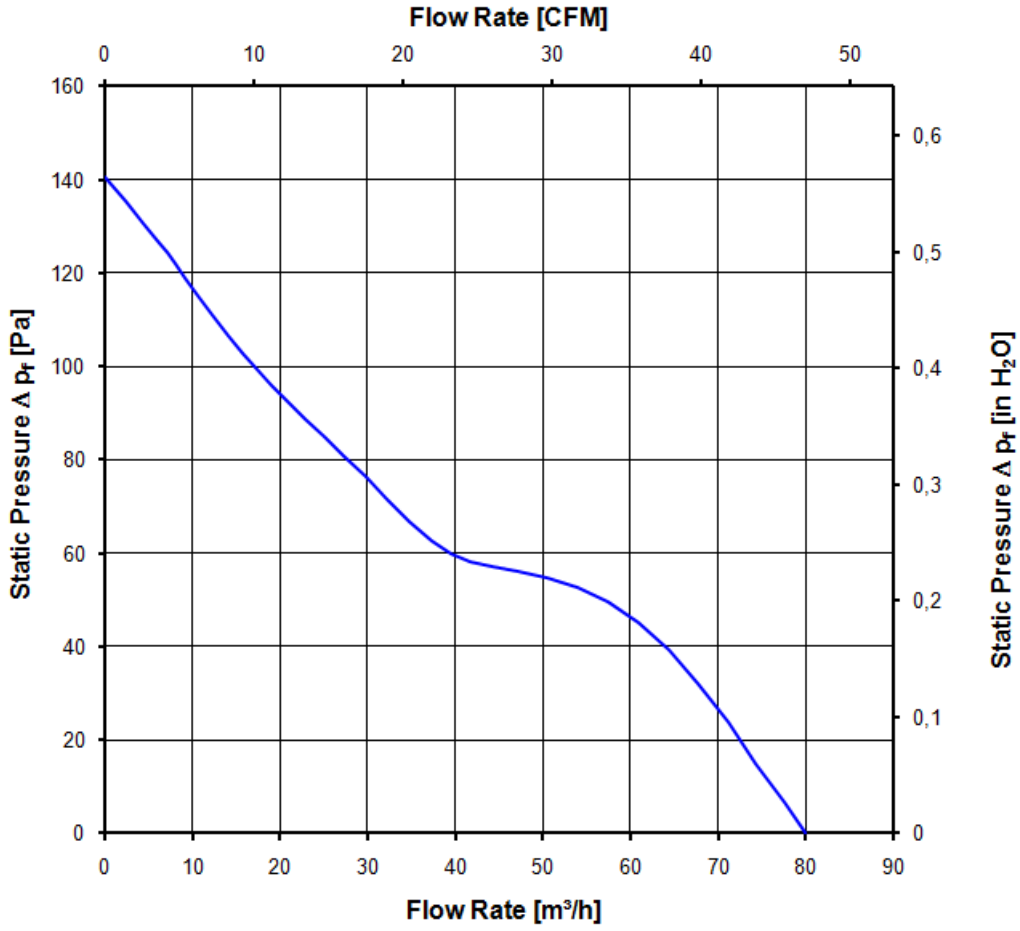

3.5 Sound Data

Measurement conditions:	Sound pressure level: 1 meter distance between microphone and the air intake. Sound power level: Acc. to DIN 45635 part 38 (ISO 10302) Measured in a semianchoic chamber with a background noise level of Lp(A) < 5 dB(A) For further measurement conditions see chapter aerodynamics.

a) Operation condition:
5.000 1/min at free air flow Frequency: 50 Hz Nominal voltage: 230 V

Optimal operating point	53,0 m3/h @ 46 Pa	
Sound power level at the optimal operating point	6,2 bel(A)	
Sound pressure level at free air flow, measured in rubber bands	48,0 dB(A)	

b) Operation condition:
5.000 1/min at free air flow Frequency: 60 Hz Nominal voltage: 115 V

Optimal operating point	53,0 m3/h @ 46 Pa	
Sound power level at the optimal operating point	6,2 bel(A)	
Sound pressure level at free air flow, measured in rubber bands	48,0 dB(A)	

4 Environment

4.1 General

Min. permitted ambient temperature TU min.	-20 °C	
Max. permitted ambient temperature TU max.	75 °C	
Min. permitted storage temperature TL min.	-40 °C	
Max. permitted storage temperature TL max.	80 °C	

4.2 Climatic Requirements

IP-protection type (certified)	IP 20 **)	
Humidity requirements	humid heat, constant; according to DIN EN 60068-2-78, 14 days	
Salt fog requirements	None	

Permitted application area:
The product is intended for use in sheltered rooms with controlled temperature and controlled humidity. Directly exposure to water must be avoided.

Pollution degree 1 (according DIN EN 60664-1)
There is either no pollution or it occurs only dry, non-conductive pollution. The pollution has no negative impact.

**) The specification of the IP protection refers to the conditions mentioned in certification of the fan. The above mentioned short description of the protection scope is not final. For detailed information of the respective protection scope and definitions, see certification as well as DIN EN 60529 (protection by housings) and ISO 20653 (for vehicles) with the letter K.

Short description of the IP-protection type:
Solid particle Protection: Protected against solid particles with a diameter of 12.5 mm and larger.
Protection against deliberate contact: Protected against contact to hazardous parts with a finger.
Protection against water: No protection.

5 Safety

5.1 Electrical Safety

A verification of thermal conditions (normal and abnormal operation) as well as the protection against electric shock, ingress of solid foreign objects and water has to be done in conjuction with the appliance.

Test voltage HV type test	1500 V
Unit test voltage	VAC
Time type test HV	1 s
Insulation resistance	RI > 10 MOhm
Protection class	built-in fan

5.2 Approval Tests

CE	EC Declaration of Conformity	Yes
EAC	Eurasian Conformity	Yes
UL	Underwriters Laboratories	Yes / UL507, Electric Fans E38324
VDE	Association for Electrical, Electronic and Information Technologies	Yes / Approval acc. to EN 60335 (VDE 0700) - Safety for household and similar electrical appliances
CSA	Canadian Standards Association	Yes / C22.2 No. 113 Fans and Ventilators
CCC	China Compulsory Certification	Yes / GB 12350 Safety Requirements for small Power Motors

According to the guidelines on the application of Directive 2006/95/EC, chapter III: Scope of the "low voltage" directive, paragraph: Are "components" included in the scope? the following has to be applied:
However, some types of electrical devices, designed and manufactured for being uses as basic components to be incorporated into other electrical equipment, are such that their safety to a very large extent depends on how they are integrated into the final product and the overall characteristics of the final product. These basic components include electronic and certain other components.
Taking into account these objectives of the "Low Voltage" Directive, such basic components, the safety of which can only, to a very large extend, be assessed taking into account, how they are incorporated and for which a risk assessment cannot be undertaken, then they are not covered as such by the Directive. In particular, they must not be CE marked unless covered by other Community legislation that requires CE marking.

6 Reliability

6.1 General

Life expectancy L10 at TU = 40 ℃	55.000 h	
Life expectancy L10 at TU max.	25.000 h	
Life expectancy L10 acc. to IPC 9591 at TU = 40 ℃	92.5 00 h	

Copying of this document, and giving it to others and the use or communication of the contents thereof, are forbidden without express authority. Offenders are liable to the payment of damages. All rights are reserved in the event of the grant of a patent or the registration of a utility model or design.

Schutzvermerk nach DIN ISO 16016 beachten/
Refer to protection notice DIN ISO 16016!

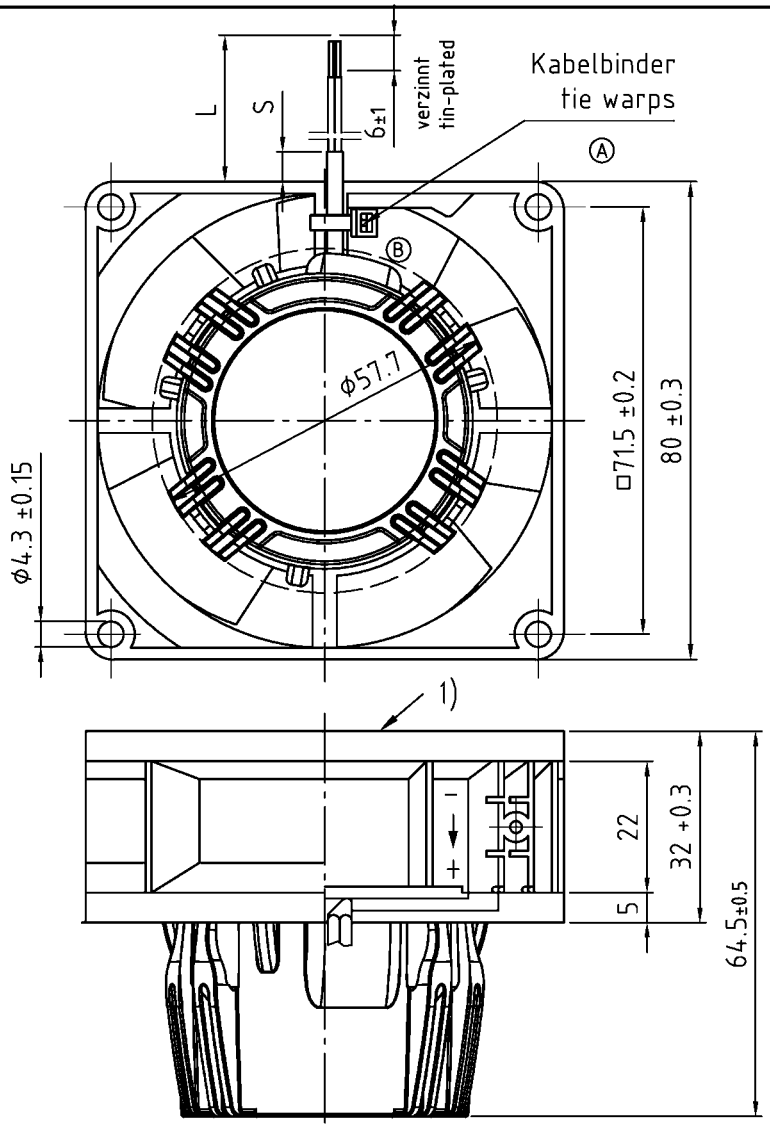

Anzahl und Länge der Litzen (L) sowie Länge Schlauch (S) siehe Produktspezifikation
Length (L) and number of wires and length (S) of tube see design specification

1) Rotorüberstand max.0.4mm zulässig
1) impeller projecting maximal 0.4mm allowable
Axialspiel bei -Kugellagerung: 0 (Federverspannung)
-Gleitlagerung (G): 0.1 - 0.5mm
axial clearance by - ball bearings: 0 (spring-tension)
- floating bearings (G): 0.1-0.5mm

Tolerierung/Tolerances: DIN 7167 Allgemeintoleranzen/ Gen. tolerances: DIN ISO 2768-mK-E			
	Datum/Date	Name/Name	Artikel/Title: axial fan (ACmaxx)
Bearb./Drawn:			Massstab/scale
	Index/Index	Aend.-Nr./Change-No.	Zchg.-Nr./ Dwg.-No.:
gepr. u. zur Verwendung freigegeben/Checked for release von/by am/on		ebm-papst St. Georgen GmbH & Co. KG	Blatt/Page: A4
			Ers.f.Zchg./ Replaces:

12/03