Covers for OGN, OGN-SMD

Cover for Holder OGN, OGN-SMD



4W/10A

Standards
- IEC 60127-6
- UL 4248-1 / UL 512
- CSA C22.2 no. 39

Approvals
- VDE Certificate Number: 4001042
- UL File Number: E39328

References
Mating cover to OGN; OGN-SMD

Weblinks
pdf-datasheet, html-datasheet, General Product Information, Approvals, CE declaration of conformity, RoHS, CHINA-RoHS, REACH, e-Shop, SCHURTER-Stock-Check, Distributor-Stock-Check, Detailed request for product

Technical Data

Fuse-Link	5 x 20 mm
Rated Power Acceptance IEC	4 W / 10 A @ Ta 23 °C 2.5 W / 10 A with transparant cover, see derating curves
Admissible Ambient Air Temp.	-40 °C to 85 °C
Material: Cover	Thermoplastic UL 94V-0
Storage Conditions	0 °C to 60 °C, max. 70% r.h.

Dimension

25 mm

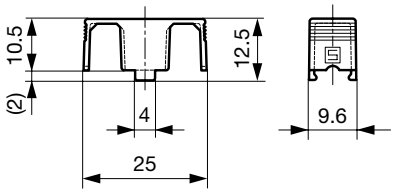

Variants 0853.0551, 0853.0571, 0853.0573 and 0853.0575

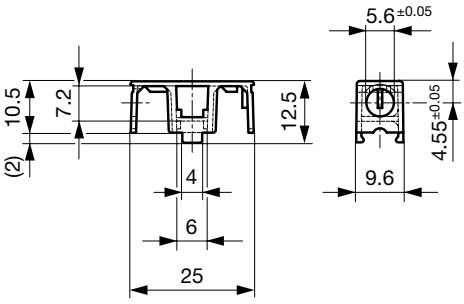

Variant 0853.0576

All Variants

Description	Order Number	
Transparent Cover (not for reflow)	0853.0551	■
Reflow-Cover	0853.0571	■
Reflow-Cover, meets IEC 60335-1	0853.0573	■
Cover, black, meets IEC 60335-1 Ed. 4.0	0853.0575	
Reflow-Cover with Clamp	0853.0576	■

■ Most Popular.

Availability for all products can be searched real-time:http://www.schurter.com/en/Stock-Check/Stock-Check-SCHURTER

Packaging Unit Bulk (100 pcs.)

05.10.2014

The specifications, descriptions and illustrations indicated in this document are based on current information. All content is subject to modifications and amendments. Information furnished is believed to be accurate and reliable. However, users should independently evaluate the suitability and test each product selected for their own applications.