sferaco
VALVES & FITTINGS

REF. 1370

WASHING MACHINE SIPHON



Size :	DN 40
Ends :	To be glued
Min Temperature :	+ 5°C
Max Temperature :	+ 90°C
Max Pressure :	1 Bar
Specifications :	NBR gasket Diameter 40 mm Elements to be glued together

Materials : PVC

Sferaco 90 rue du Ruisseau 38297 St Quentin Fallavier Tel: + 33 (0) 474.94.15.90 Fax: + 33 (0) 474.95.62.08 Internet: www.sferaco.fr E-mail : sferaco@sferaco.fr

Information provided as an indication and subject to possible modification

sferaco
VALVES & FITTINGS

REF. 1370

WASHING MACHINE SIPHON

SPECIFICATIONS :

- NBR gasket
- Diameter 40 mm
- Elements to be glued together

USE :

- For washing machine
- Min Temperature Ts : + 5°C
- Max Temperature Ts : + 90°C
- Max Pressure PN :1 bar

RANGE :



- Horizontal siphon **Ref. 1370001**



- Vertical siphon **Ref. 1370002**



- Funnel **Ref. 1370003**

Information provided as an indication and subject to possible modification

WASHING MACHINE SIPHON

MATERIALS :

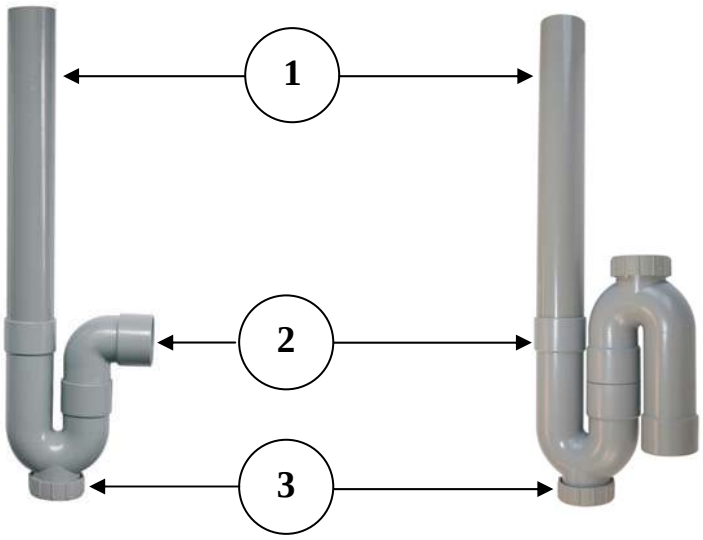

Ref. 1370001

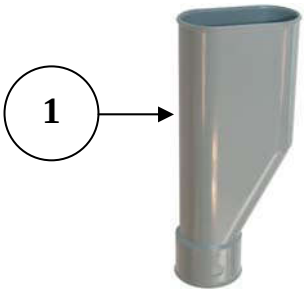

Ref. 1370003

Ref. 1370002

Item	Designation	Materials Ref. 1370001 and 1370002
1	Tub	PVC
2	Fittings	ABS
3	Cap	Polypropylene + NBR gasket

Item	Designation	Materials Ref. 1370003
1	Body	ABS

Information provided as an indication and subject to possible modification

WASHING MACHINE SIPHON

SIZE (in mm) :

Ref. 1370001

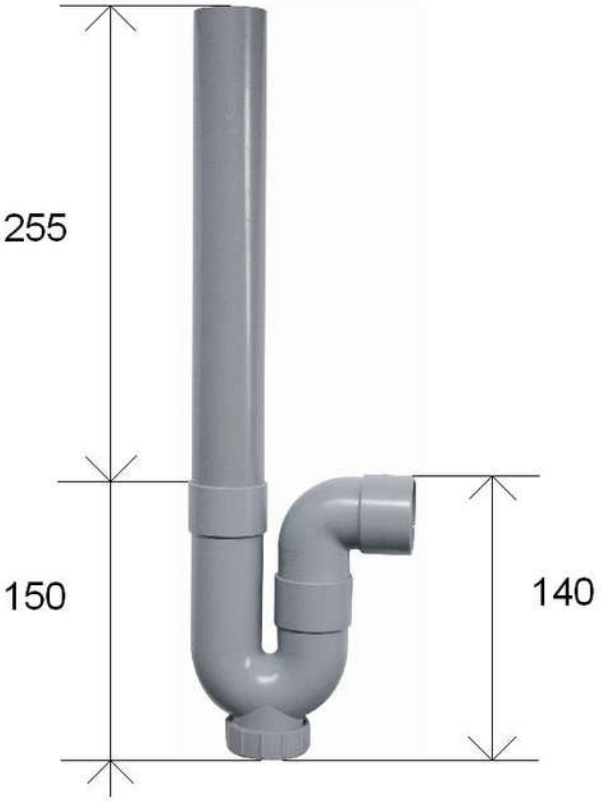

Ref. 1370002

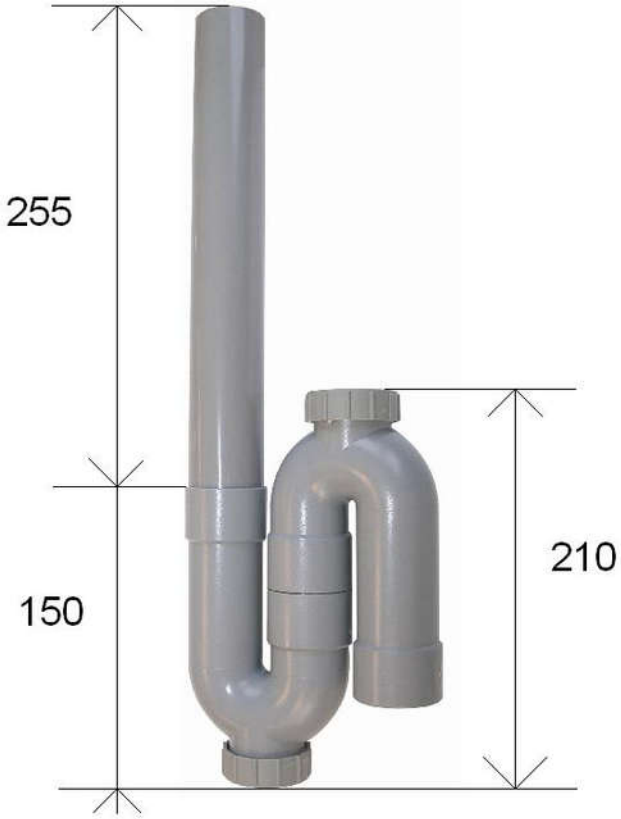

Ref. 1370003



Sferaco 90 rue du Ruisseau 38297 St Quentin Fallavier Tel: + 33 (0) 474.94.15.90 Fax: + 33 (0) 474.95.62.08 Internet: www.sferaco.fr E-mail : sferaco@sferaco.fr

Information provided as an indication and subject to possible modification

WASHING MACHINE SIPHON

STANDARDS :

- DIRECTIVE 97/23/CE : Concerned by article 3, § 3

ADVICE : Our opinion and our advice are not guaranteed and SFERACO shall not be liable for the consequences of damages.
The customer must check the right choice of the products with the real service conditions.

Information provided as an indication and subject to possible modification