IL5010

Inductive sensor

ILA3002-APKG/OBEN/PH RT

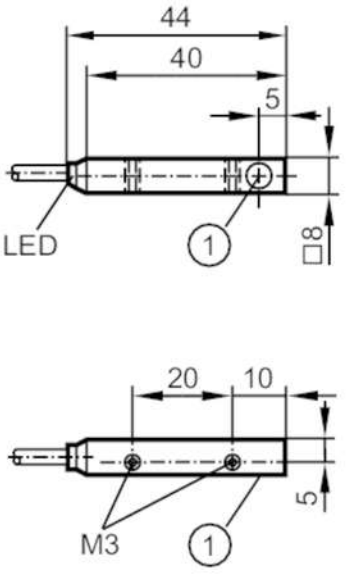

1 Sensing face

Product characteristics		
Electrical design		PNP
Output function		normally closed
Sensing range	[mm]	2
Housing		rectangular
Dimensions	[mm]	40 x 8 x 8
Electrical data		
Operating voltage	[V]	10...36 DC
Current consumption	[mA]	15; (24 V)
Protection class		III
Reverse polarity protection		yes
Outputs		
Electrical design		PNP
Output function		normally closed
Max. voltage drop switching output DC	[V]	2.5
Permanent current rating of switching output DC	[mA]	250
Switching frequency DC	[Hz]	2000
Short-circuit protection		yes
Type of short-circuit protection		pulsed
Overload protection		yes
Detection zone		
Sensing range	[mm]	2
Real sensing range Sr	[mm]	2 ± 10 %

IL5010

Inductive sensor

ILA3002-APKG/OBEN/PH RT

Operating distance	[mm]	0...1.6	
Accuracy / deviations			
Correction factor		steel: 1 / stainless steel: 0.7 / brass: 0.5 / aluminium: 0.4 / copper: 0.3	
Hysteresis	[% of Sr]	1...15	
Switch point drift	[% of Sr]	-10...10	
Operating conditions			
Ambient temperature	[°C]	-25...70	
Protection		IP 65	
Tests / approvals			
EMC		EN 60947-5-2	
MTTF	[years]	3523	
UL approval		Ta	-25...70 °C
		Enclosure type	Type 1
		power supply	Limited Voltage/Current
		File number UL	E174191
Mechanical data			
Weight	[g]	42.2	
Housing		rectangular	
Mounting		flush mountable	
Dimensions	[mm]	40 x 8 x 8	
Materials		brass white bronze coated; LCP	
Tightening torque	[Nm]	1; (insertion depth: > 5 mm)	
Displays / operating elements			
Display		switching status	1 x LED, red
Remarks			
Pack quantity		1 pcs.	
Electrical connection			

Cable: 2 m, PUR; 3 x 0.14 mm²

Connection

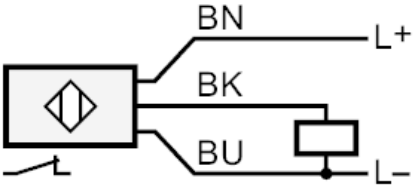

Core colours :
BN = brown
BU = blue
BK = black