E11963

Jumper cable with valve plug

VVDAA040MSS0003B03STGH030MSS

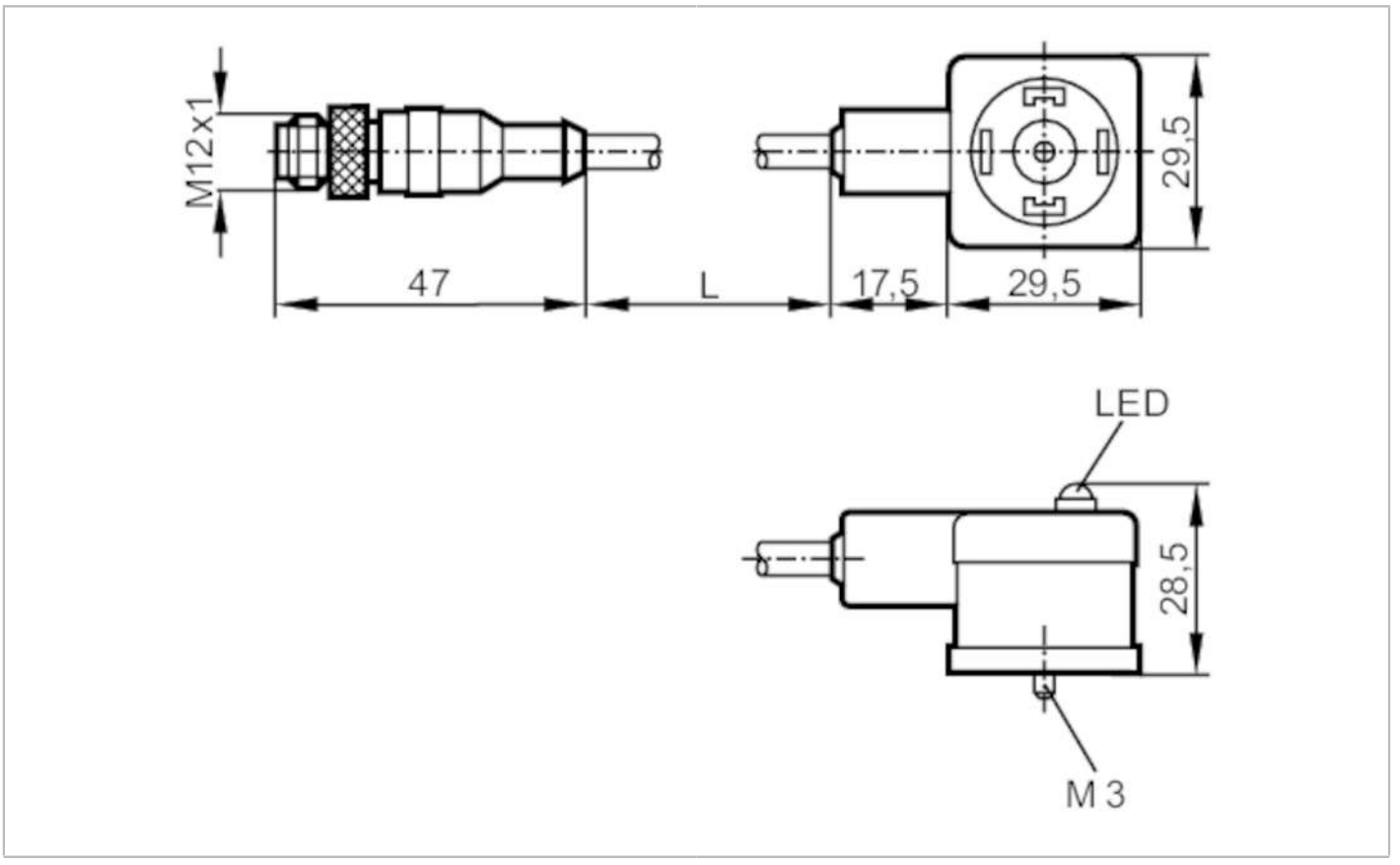

Application		
Special feature		Free from silicone; Halogen-free; Gold-plated contacts
Free from silicone		yes
Electrical data		
Operating voltage	[V]	< 24 AC/DC
Overvoltage protection		free-wheeling diode
Operating conditions		
Ambient temperature	[°C]	-25...90
Protection		IP 67
Mechanical data		
Weight	[g]	183.5
Materials		TPU
Moulded-body material		TPU
Material nut		brass, nickel-plated
Displays / operating elements		
Display	operation	1 x LED, green
Accessories		
Items supplied		screw
		panel for labelling

E11963

Jumper cable with valve plug

VVDAA040MSS0003B03STGH030MSS

Remarks

Pack quantity	1 pcs.

Electrical connection - plug

Connector: 1 x M12, straight; coding: A; Moulded body: TPU; Locking: brass, nickel-plated; Contacts: gold-plated

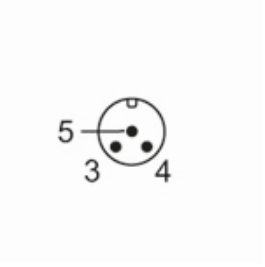

Electrical connection

Cable: 3 m, PUR / PVC, Halogen-free; 3 x 0.5 mm² (42 x Ø 0.1 mm)

Connection

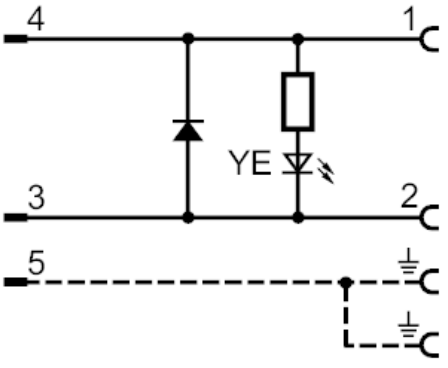

Electrical connection - socket

Connector: 1 x valve type A DIN, angled; Moulded body: TPU; Locking: brass, nickel-plated; Contacts: nickel-plated brass

