E11657

Wirable socket

SDOGH040MSSFKPG

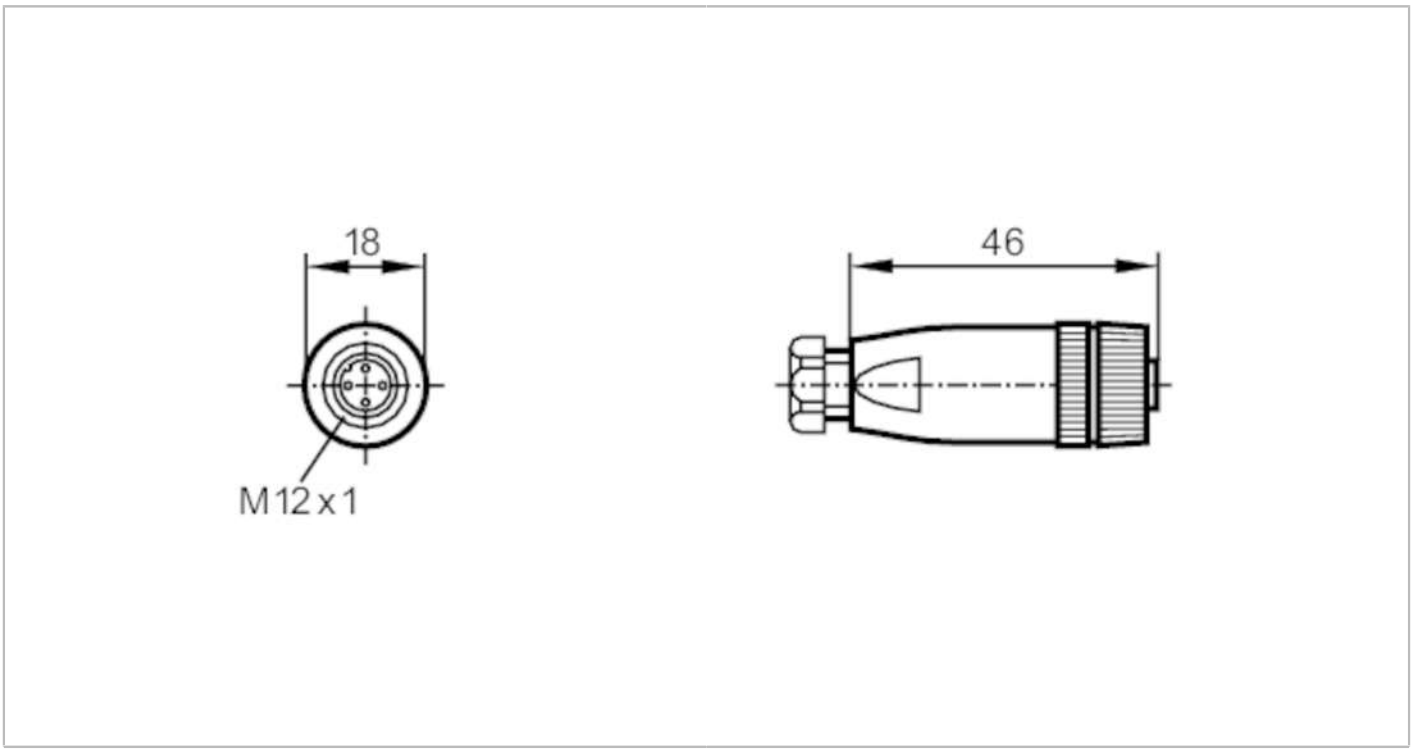

Application		
Special feature		Free from silicone; Gold-plated contacts
Free from silicone		yes
Electrical data		
Operating voltage	[V]	< 45 AC / < 70 DC
Max. current load total	[A]	4; (...40 °C)
Operating conditions		
Ambient temperature	[°C]	-25...100
Protection		IP 68
Mechanical data		
Weight	[g]	28.8
Dimensions	[mm]	18 x 18 x 46
Materials		PA
Moulded-body material		PA
Material nut		brass, nickel-plated
Remarks		
Pack quantity		1 pcs.
Electrical connection		
screw terminals: ...0.75 mm²; Cable sheath: Ø 6...8 mm		
Electrical connection - socket		
Connector: 1 x M12, straight; coding: A; Moulded body: PA; Locking: brass, nickel-plated; Contacts: gold-plated		

E11657

Wirable socket

SDOGH040MSSFKPG



Connection

