Actuator

Series IN65/I81-modular system

Description **AHSGU RO50 EINR.**	Article number **3918352359**

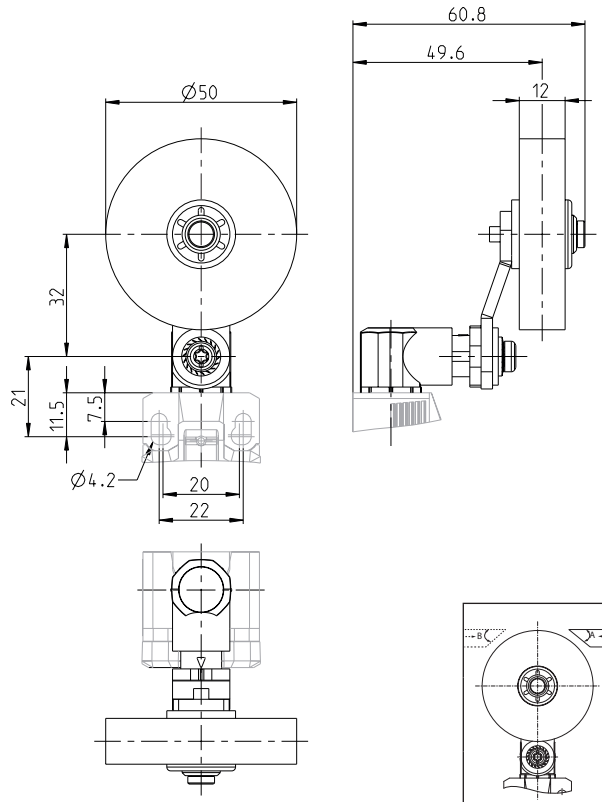

	m/s	0,1	0,5	1	2	5
	A	45°	45°	45°	40°	30°
	B	45°	45°	45°	40°	30°

Switching symbol depending on the switching function used

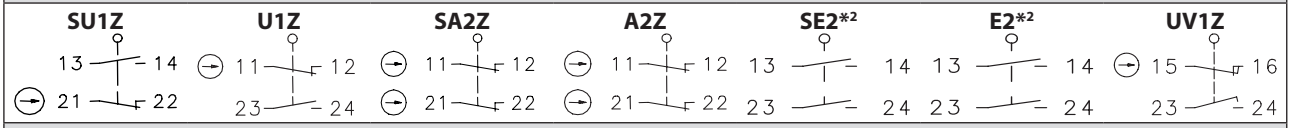

Operating diagram depending on the switching function used and the switch series

Operating diagram when using the actuator on an IN65...

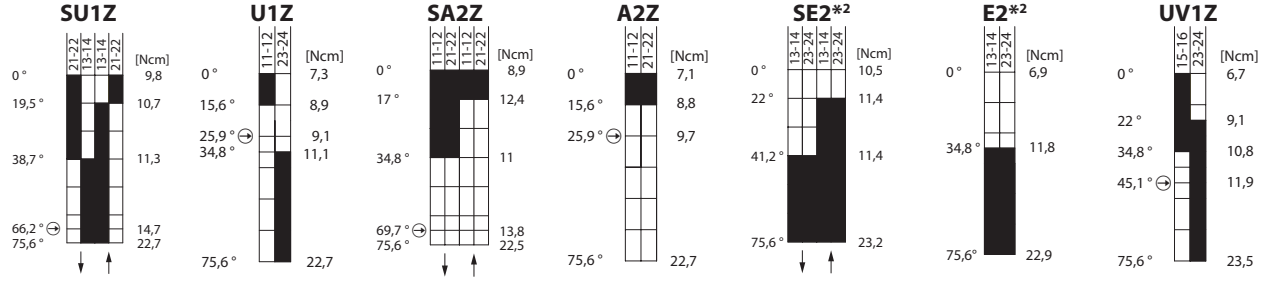

Operating diagram when using the actuator on an I81...

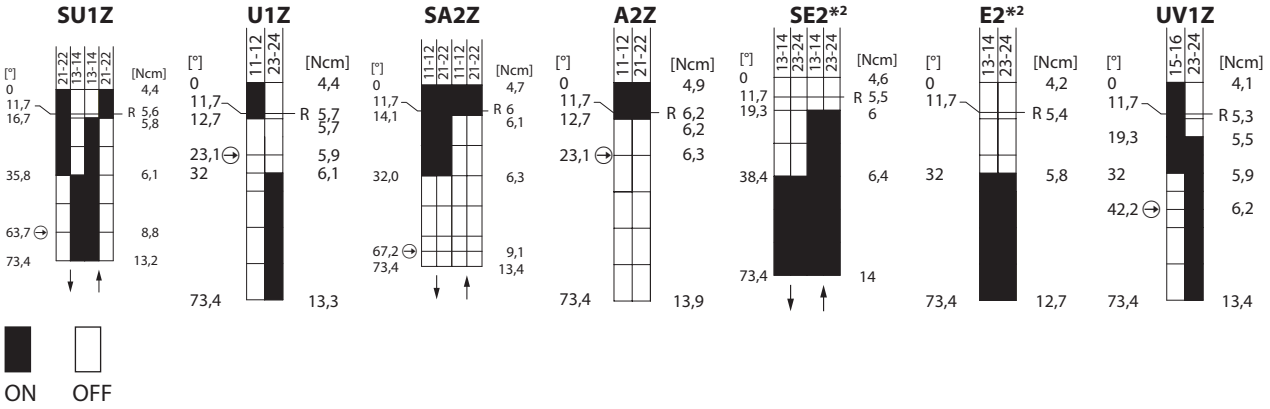

Tolerance:
Operating point ± 3,5 °;
Direct opening action +3,5 °
Operating torque ± 20 %

Mechanical data		
Actuator		Metal lever with rubber roller / lever in 15 ° increments adjustable
Operating temperature		-30 °C ... +75 °C
Storage temperature		-40 °C ... +80 °C
Protection type		IP66 / IP67 acc. EN 60529
Operating rate	V	0,06 m/min ≤ V ≤ 30 m/min
Switching frequency		≤ 100 / min.
Mechanical life		10 x 10^6 operating cycles*1
Mission time		≤20 years
Weight		≈ 0,06 kg
Installation position		operator definable

Actuation

The actuating device is preferably started from 2 sides.
By lifting the clamp the actuation assembly can be rotated in 45° increments such that 16 actuation directions are possible.
The actuation assembly is to be again fastened to the housing by lowering the clamp.

Notes

*1 The specification represents the maximum value for the respective individual component of the kit. The decisive mechanical life is determined for the completely assembled terminal device by the individual component with the lowest value.
*2 These switching functions have no safety function / direct opening action. The built-in switch is therefore not available as a single component, but is only available as factory assembled in a housing.

The degree of protection (IP code) specified applies solely in the mounted state.

Properties applies only to the fully assembled device.