128, av. du Maréchal-de-Lattre-de-Tassigny - 87045 LIMOGES Cedex
Tel: +33(0)5 55 06 87 87 - Fax: +33(0)5 55 06 88 88
www.legrand.com

Plugs, extensions, "Octopus" multi-outlet extension French/Belgian standard

Cat. Nos: 0 501 14/15/17 - 0 502 52 - 0 504 45/46/47 0 505 75/77/78 - 0 908 20 - 0 939 14/15/17 - 0 969 29

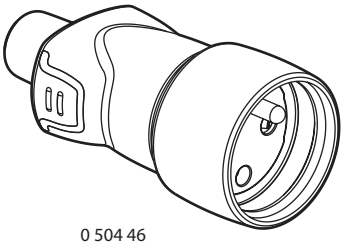

0 504 46

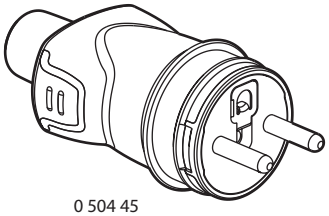

0 504 45

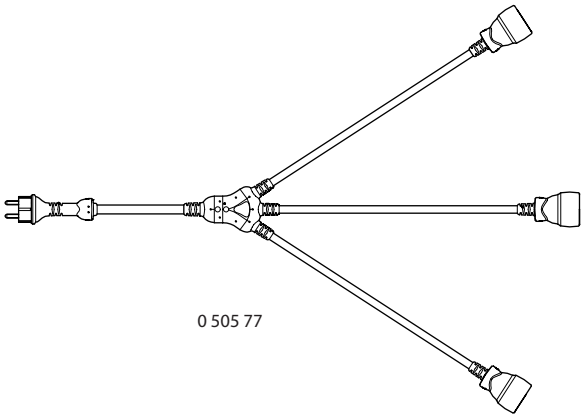

0 505 77

1. USE

16 A black rubber plugs and extensions, for intensive or outdoor use.
Screw cable grip for H07 RNF 3G cable 2.5 mm² max.

2. RANGE

PLUGS		
	2P+E plug with straight output - IP 44	0 504 45 0 501 14 0 939 14
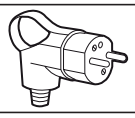	2P+E plug with right-angled output French/Belgian and German standard	0 502 52 0 969 29
EXTENSIONS		
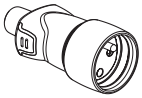	2P+E extension with straight output IP 44 with male plug Cat. Nos. 0 504 40/44/45	0 504 46 0 501 15 0 939 15
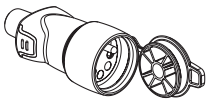	2P+E extension with straight output IP 44 with a cap and IP 44 with male plug Cat. Nos. 0 504 40/44/45	0 504 47 0 501 17 0 939 17
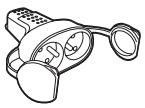	2 x 2P+E extension with hanging ring and IP 44 caps	0 505 75 0 908 20
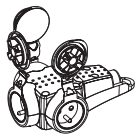	3 x 2P+E extension with hanging ring and IP 44 caps	0 505 78
MULTI-OUTLET EXTENSION		
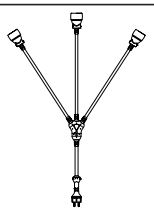	3 x 2P+E "Octopus" multi-outlet extension: - 1 French/Belgian and German standard plug - 3 x 2P+E extensions with straight output	0 505 77

3. POSITIONING

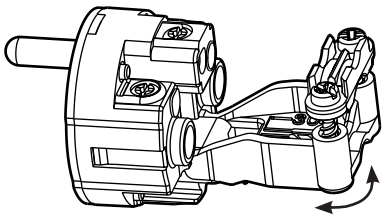

Pivoting cable grip holder, for easy access to the connection terminals

Length of sheath to be removed: 30 mm
Wire stripping length: 8 mm

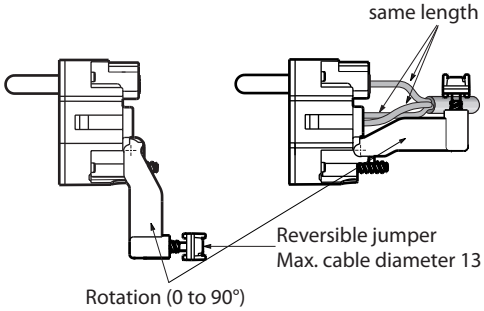

4. DIMENSIONS (mm)

Pin diameter: 4.8 mm

Cat. No. 0 504 45

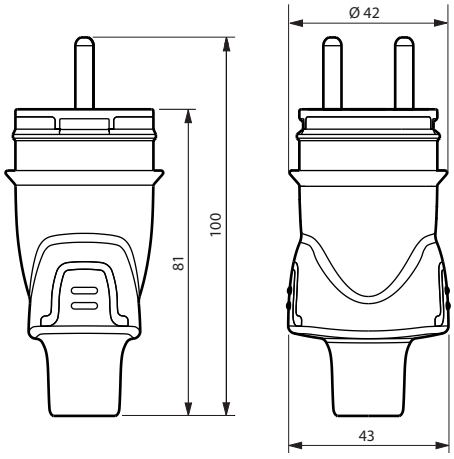

4. DIMENSIONS (mm) *(continued)*

Cat. No. 0 504 46

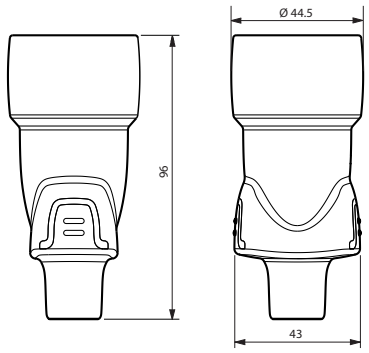

Cat. No. 0 502 52

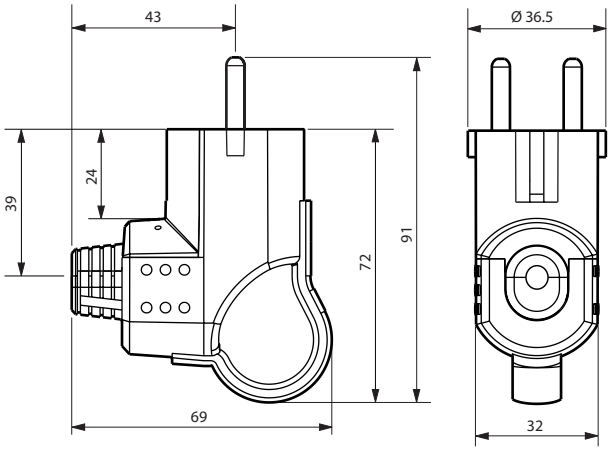

Cat. No. 0 504 47

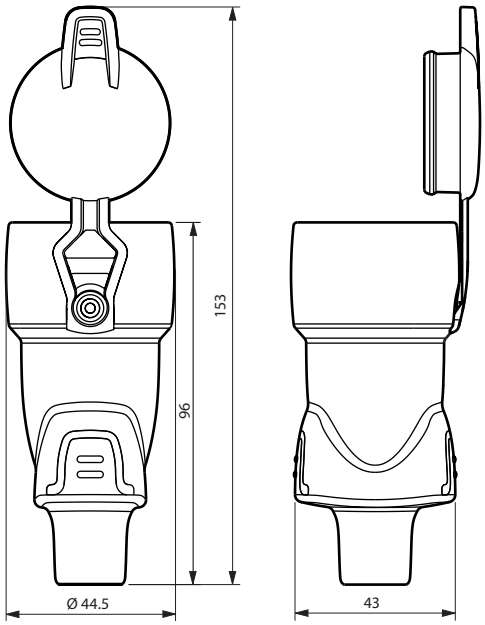

4. DIMENSIONS (mm) *(continued)*

Cat. No. 0 505 77

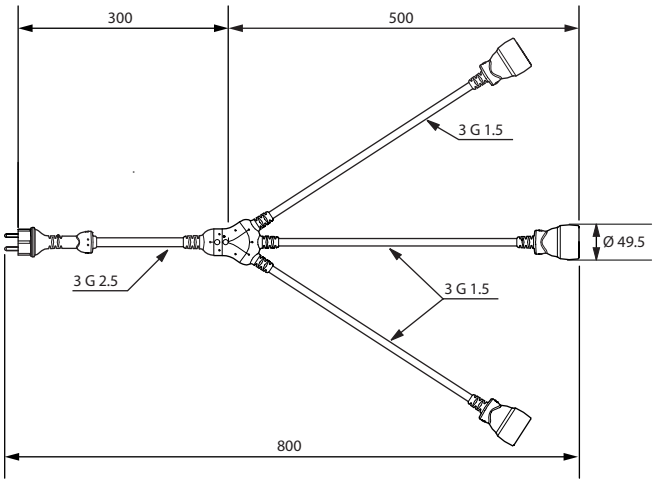

Cat. No. 0 505 75

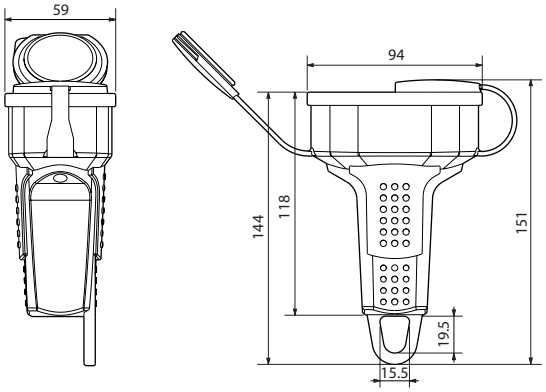

Cat. No. 0 505 78

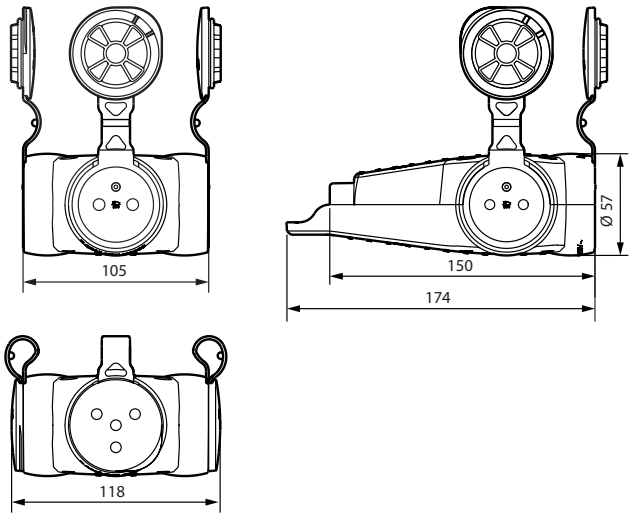

5. CONNECTION

Terminal type: screw
Terminal capacity: 2.5 mm²
Screwdriver: crosshead or Philips no. 1 or 4 mm flat

6. TECHNICAL CHARACTERISTICS

■ 6.1 Mechanical characteristics
Protection against impacts: IK 08
IK 10 for Cat. No. 0 505 77
Protection against solid bodies and liquids:
- IP 44
- IP 20 for Cat. Nos. 0 502 52 - 0 969 29

■ 6.2 Material characteristics
SEBS: similar appearance and quality to rubber (or better)
Shutters: reinforced polyamide
Pins: brass

Self-extinguishing:
+ 750° C / 30 s for parts made of insulating materials holding live parts in place
+ 650° C / 30 s for other parts made of insulating materials

■ 6.3 Electrical characteristics
Voltage: 250 V~
Current: 16 A
Frequency: 50/60 Hz
Power: 3680 W

■ 6.4 Climate characteristics
Storage temperatures: - 15° C to + 70° C
Operating temperatures: - 10° C to + 50° C

8. CARE

Clean the surface with a cloth.
Do not use acetone, tar-removing cleaning agents or trichloroethylene.

Caution: Always test before using special cleaning products.

9. STANDARDS AND APPROVALS

Products conforming to NF C 61-314 and IEC 884-1.
Conforming to the recommendations of the OPPBTP (French professional organisation for accident prevention in building and civil engineering).
Particular requirements of mobile products taken into account, 1.5 mm^2 flexible cable.