Max. 260 m³/h

DC axial fans

☐ 135 x 38 mm



- **Material:** Housing: Die-cast aluminum
  Impeller: painted sheet steel
- **Direction of air flow:** Exhaust over struts
- **Direction of rotation:** Counterclockwise, looking towards rotor
- **Connection:** Via single wires AWG 22, TR 64
- **Highlights:** Housing with grounding lug for screw M4 x 8 (Torx)
  48 V design incl. screws.
- **Weight:** 650 g

- **Possible special versions:**
  (See chapter DC fans - specials)
  - Speed signal
  - Go / NoGo alarm
  - Alarm with speed limit
  - External temperature sensor
  - Internal temperature sensor
  - PWM control input
  - Analog control input
  - Moisture protection
  - Salt spray protection
  - Degree of protection: IP 54

Series 5100 N **Nominal data**	Air flow	Air flow	**Nominal voltage**	Voltage range	Sound pressure level	Sound power level	Sintec sleeve bearings Ball bearings	Power consumption*	Nominal speed	Temperature range	Service life L_{10} (40 °C) ebm-papst standard Service life L_{10} (T_{max}) ebm-papst standard	Life expectancy L_{10IPC} (40 °C) see page 17	Curve
Type	**m³/h**	**cfm**	**VDC**	**VDC**	**dB(A)**	**Bel(A)**	**□/■**	**Watts**	**rpm⁻¹**	**°C**	**Hours**	**Hours**	
5112 N	260	153	**12**	6...15	48	6.1	■	9.5	2 900	-25...+72	80 000 / 37 500	135 000	①
5114 N	260	153	**24**	12...30	48	6.1	■	9.5	2 900	-25...+72	80 000 / 37 500	135 000	①
5118 N	260	153	**48**	24...60	48	6.1	■	9.5	2 900	-25...+72	80 000 / 37 500	135 000	①

Subject to change

* Power consumption at free air flow. These values can be significantly higher in the operating point.

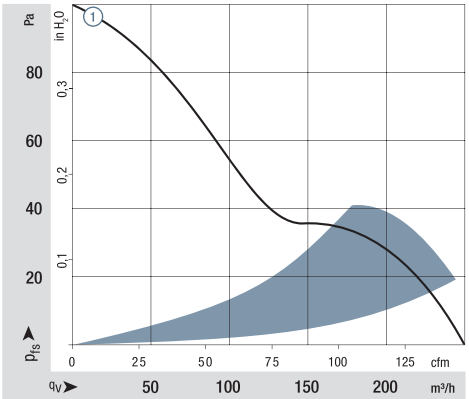

Air performance measured according to: ISO 5801.
Installation category A, without contact protection.
Noise: Total sound power level L_{WA} ISO 103002 measured on a hemisphere with a radius of 2 m.
Sound pressure level L_{pA} measured at 1 m distance from fan axis.
The values given are applicable only under the specified measuring conditions and may differ depending on the installation conditions.
In the event of deviation from the standard configuration, the parameters must be checked after installation!
For detailed information see
http://www.ebmpapst.com/general conditions

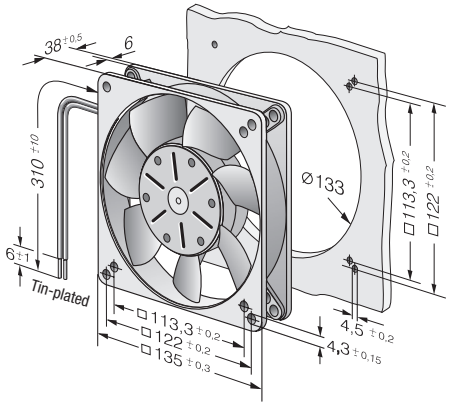

Finger guards from p. 242

ebmpapst