EVT250

Connection cable

VDOGF040VAS0001E04STGH040VAS

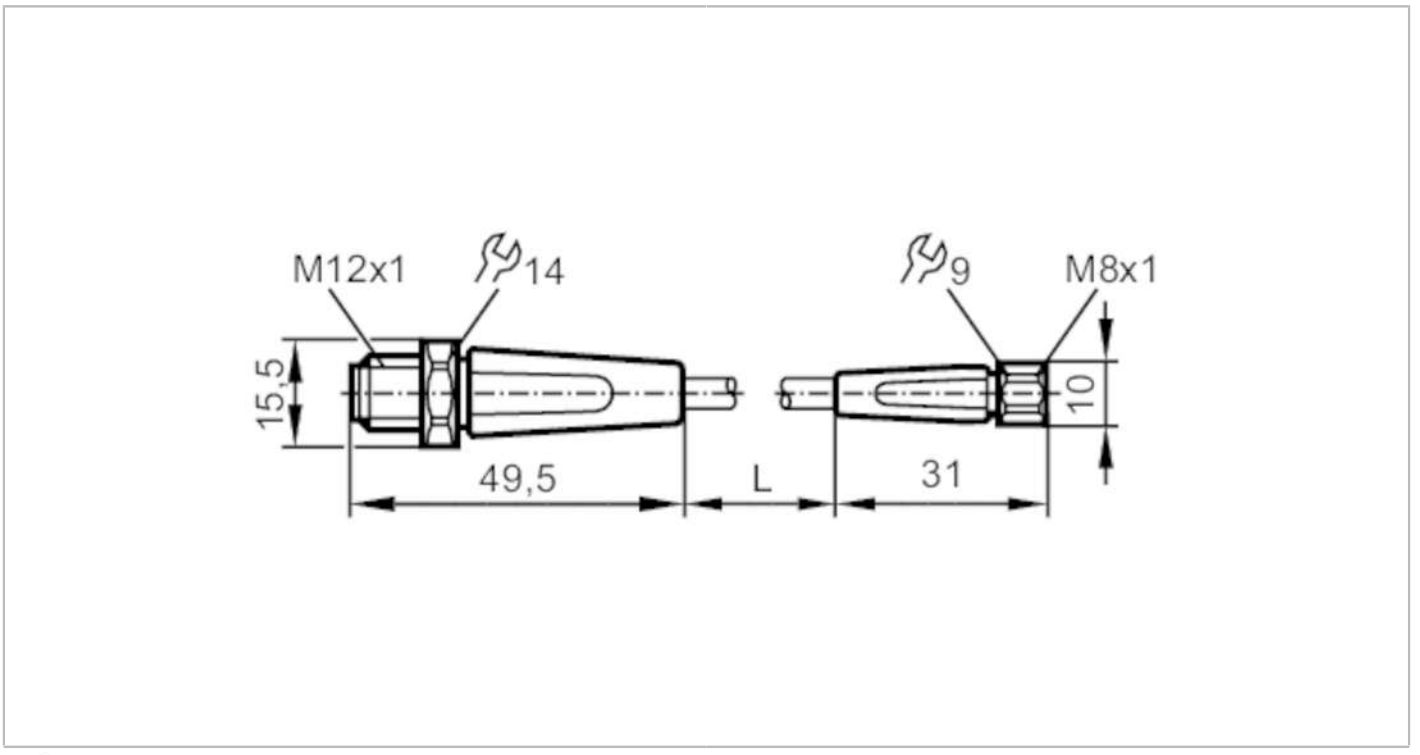

Application		
Application		hygienic and wet areas in the food industry
Free from silicone		yes
Electrical data		
Operating voltage	[V]	< 50 AC / < 60 DC
Protection class		III
Max. current load total	[A]	3
Operating conditions		
Ambient temperature	[°C]	-25...80
Note on ambient temperature		cULus: ...50
Ambient temperature (moving)	[°C]	5...80
Note on ambient temperature (moving)		cULus: ...50
Protection		IP 65; IP 67; IP 68; IP 69K
Mechanical data		
Weight	[g]	64.6
Dimensions	[mm]	15.5 x 15.5 x 49.5
Materials		housing: PVC orange; Sealing: EPDM
Material nut		stainless steel (1.4404 / 316L) / stainless steel (1.4404 / 316L)
Drag chain suitability		bending radius for flexible use: min. 10 x cable diameter travel speed: max. 3.3 m/s for a horizontal travel length of 5 m and

EVT250

Connection cable

VDOGF040VAS0001E04STGH040VAS

		max. acceleration of 5 m/s²			
	bending cycles		> 1 Mio.		
	torsional strain		± 180 °/m		

Remarks

Pack quantity	1 pcs.

Electrical connection

Cable: 1 m, PVC, orange, Ø 4.9 mm; 4 x 0.34 mm² (42 x Ø 0.1 mm)

Electrical connection - socket

Connector: 1 x M8, straight; Locking: , stainless steel (1.4404 / 316L); Kontakte: gold-plated; Tightening torque: 0.3...0.5

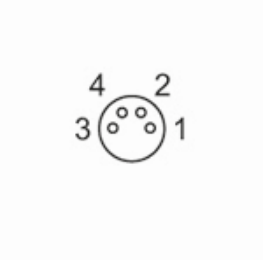

Electrical connection - plug

Connector: 1 x M12, straight; Locking: , stainless steel (1.4404 / 316L); Kontakte: gold-plated; Tightening torque: 0.6...1.5



Connection

