A01ES-D

Emergency stop switches

Distinctive features and specifications

A01ESD1701A-R1



- ❑ **Approved to EN 60947-5-5**
- ❑ **5 prominent red actuator styles**
- ❑ **Locked/unlocked status indicator**
- ❑ **AC15 1,5A 250VAC, 6A 250VAC**
- ❑ **Panel sealed to IP65**

ENVIRONMENTAL SPECIFICATIONS

- Sealing options : front panel IP65, rear panel IP40 according to EN60947-5-5
- Operating temperature : -20°C to +55°C

ELECTRICAL SPECIFICATIONS

- Electrical function : push to shut off, twist to release
- Current/voltage rating : AC-15 1,5A 250VAC, 6A 250VAC
- Electrical life : 6.050 cycles
- Contact gap : > 3mm
- Insulation resistance : 50MΩ min
- Dielectric test voltage : 2900V

GENERAL SPECIFICATIONS

- Panel thickness : 6mm (.236) max.
- Mechanical life : 6050 cycles
- Operating force : 18 to 20N
- Torque : 0.8Nm
- Soldering : 350C, 5 seconds (IEC 68-2-2-20Tb, method 2)
- Switch terminals : solder/ quick-connect 2.8mm (.110) (IEC 68-2-20)

PANEL CUT-OUT

A01ES-DM - A01ES-DSP3

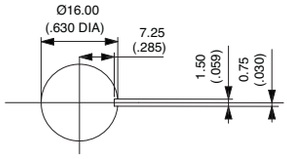

A01ES-D - A01ES-DF1- A01ES-DF2

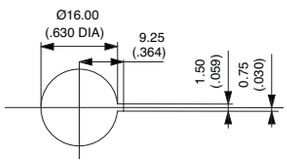

MATERIALS

- Operator case : polyetherimide
- Actuator : polycarbonate
- Switch block : PBT
- Panel seal : neoprene

AGENCY APPROVAL

Switch block approved to
UL 1054 / VDE / EN 61058-1

D

The company reserves the right to change specifications without notice.

A01ES-D

Emergency stop switches

Overview

HOW TO ORDER

An emergency stop switch assembly requires : 1 operator + 1 switch block.

OPERATOR

A01 [ ] [ ]

SERIES

Operator type

ES	Emergency stop

Actuator

DM	Mushroom head (standard)
D	Knurled head
DF1	Finger grip
DF2	Smooth
DSP3	Ø 40 mm head

SWITCH BLOCK

A01 [ ] [ ]

SERIES

Switch block

50B-D	Single pole
54B-D	Double pole

Options

Blank	None

Customization on request.

D

Example A01ES-D + A0154B-D

Ø 16 mm red twist to reset, standard actuator with double pole positive break switch block.



Dimensions : first dimensions are in mm while inches are shown as bracketed numbers.

Mounting accessories : Standard hardware supplied : 1 nut and 1 flat panel seal.

A01ES-D

Emergency stop switches

Panel cut-out Ø 16 mm (.629)

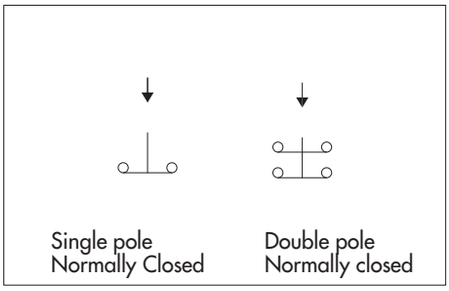

OPERATOR

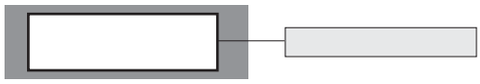

Mushroom head actuator - standard



A01ES-DM

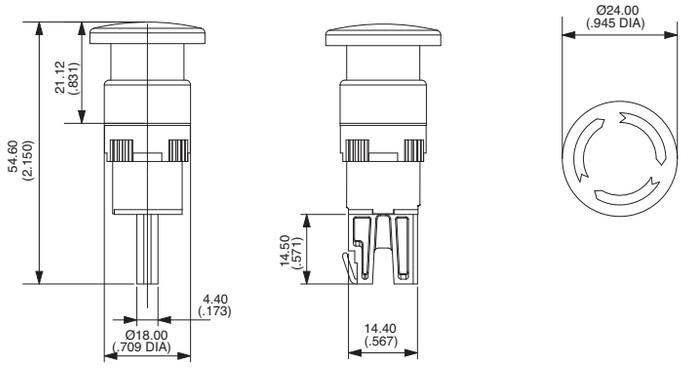

Knurled head actuator



A01ES-D

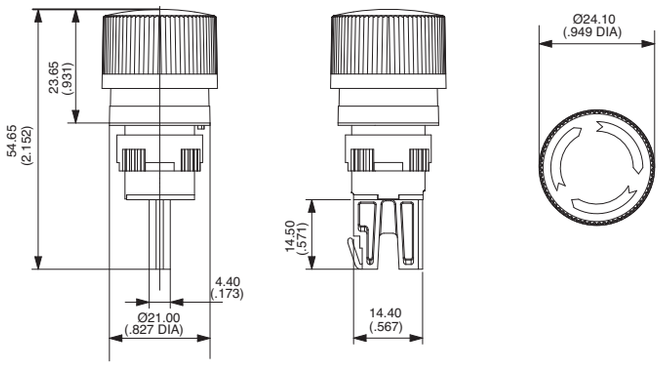

Finger grip actuator



A01ES-DF1

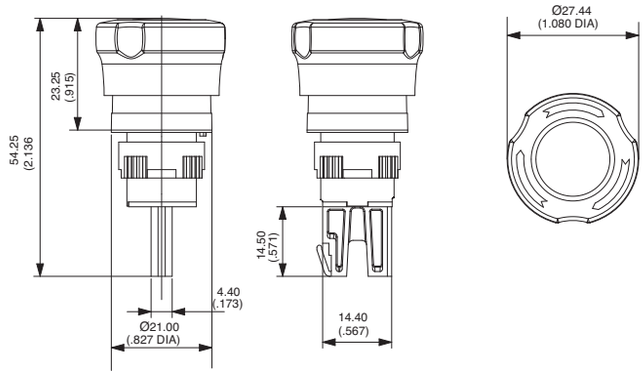

D

A01ES-D

Emergency stop switches

Panel cut-out Ø 16 mm (.629)

Smooth actuator



A01ES-DF2

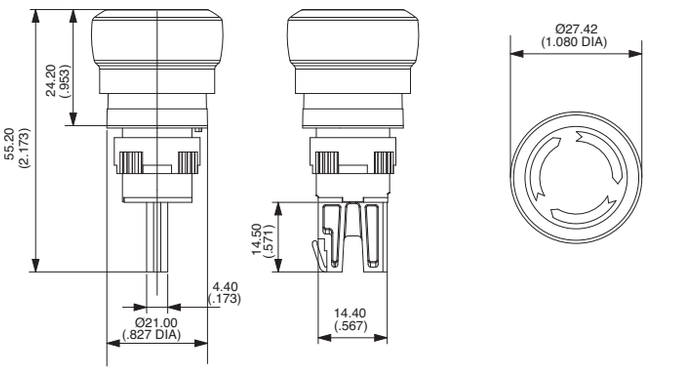

Ø 40 mm head actuator



A01ES-DSP3

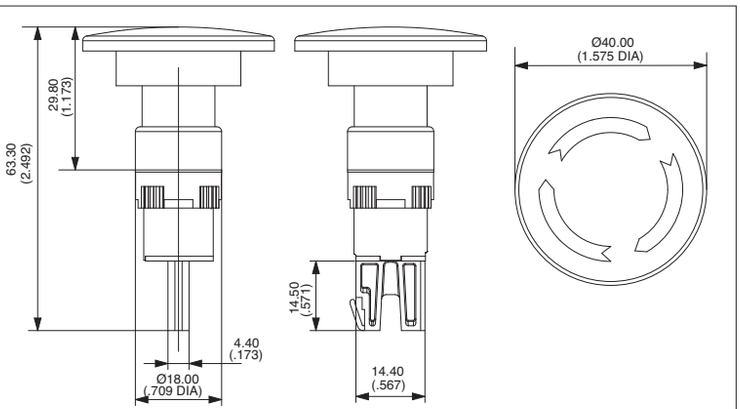

SWITCH BLOCK

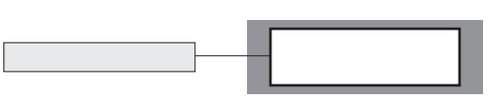

Customization on request, please contact APEM.

Single pole : A0150B-D

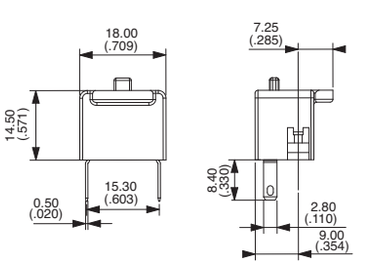

Double pole : A0154B-D

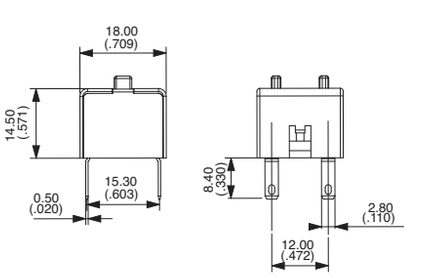

Accessory : Ø 60 mm self adhesive Label



English text	**A01YL1**
Without text	**A01YL2**
French text	**A01YL3**
Italian text	**A01YL4**

Other languages on request.

Accessory : nut tool



Part number : **30-0001**