Trapped Key ISOLATOR SWITCH with solenoid control – Type ISP-SKR

Operating Instructions

ISOLATION SWITCH WITH SOLENOID CONTROL (PANEL MOUNT) - **ISP-SKR:**

ISP-SKR



Fitted with RED/GREEN status lamps.

In addition to the 4 pole main Isolator Contacts, all models of the isolation switch ISP-SKR are supplied with:

RED lamp wired to indicate Solenoid energized.

GREEN lamp for end user designation.

2NC 1NO monitoring contact block.

Solenoid energised to release key.

Power "ON" = Key TRAPPED. Power "OFF" = Key can be RELEASED

STAINLESS STEEL 316 BARREL HOUSING AND DUST CAP				
Sales Number	ISOLATION SWITCH PANEL MOUNT SOLENOID KEY RELEASE			RATING
SS-ISP-SKR-25	25A	690V	4 pole	
SS-ISP-SKR-40	40A	690V	4 pole	
SS-ISP-SKR-63	63A	690V	4 pole	

DIE CAST (Mirror Finish) BARREL HOUSING AND DUST CAP				
Sales Number	ISOLATION SWITCH PANEL MOUNT SOLENOID KEY RELEASE			RATING
M-ISP-SKR-25	25A	690V	4 pole	
M-ISP-SKR-40	40A	690V	4 pole	
M-ISP-SKR-63	63A	690V	4 pole	

Monitoring Contacts:

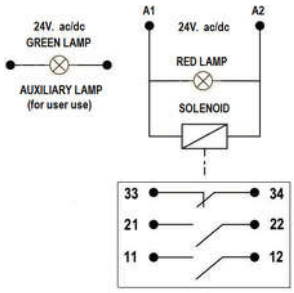

MONITORING CONNECTION TERMINALS			
Terminals	Description	RATING	
A1 A2	Solenoid voltage 24V ac/dc	-	
11 12	Closed when key is trapped and solenoid de-energized. Open when solenoid is energized – trapped open if key removed.	230V	3A
21 22	Closed when key is trapped and solenoid de-energized. Open when solenoid is energized – trapped open if key removed.	230V	3A
33 34	Open when solenoid is key is trapped. Closed when solenoid is energized – trapped open if key removed.	230V	3A
24V Auxiliary Lamp	3mm spade terminal - GREEN (not connected).	-	

ACCESSORY: AUXILIARY SIGNAL CONTACT BLOCK: **AUX-SP**



Optional Auxiliary Signal Contact Block to indicate isolator status.

Fits to all ISP-SKR and ISP isolation switch panel mount.

AUXILIARY CONTACT BLOCK				
AUX-ISP	1NC+1NO	AC-15	6A 230V/4A 415V)	

READ AND UNDERSTAND THESE INSTRUCTIONS BEFORE INSTALLING, OPERATING, OR MAINTAINING THIS EQUIPMENT.
The product is designed to be a component of a customized safety oriented control system. It is the responsibility of the user to ensure the correct overall functionality of its systems and machines.
IDEM, its subsidiaries and affiliates, are not in a position to guarantee all of the characteristics of a given system or product not designed by IDEM.

INSTALLATION: Installation must only be carried out by competent personnel and in accordance with these instructions.
Always use correct size metal mounting bolts (M4). Tightening torque 2Nm.

WARNING:
It is the responsibility of the person installing the electrical equipment to ensure that the installation meets the requirements of the IET wiring regulations and is therefore 'fit for purpose'. Factors such as correct selection of components, cable sizing, protective devices and Earth bonding are all critical and should be checked prior to full testing and power-up. Any other regulations applicable to the equipment being installed such as the Machinery Directive and current health and safety legislation must also be adhered to. Terminals, including factory fitted, should be checked periodically to ensure correct tightness.

MAINTENANCE: Every month: Check correct operation of all circuits. If the key or housing display signs of mechanical damage then remove and replace.
IDEM will not accept responsibility for failure of the interlock functions if the installation and maintenance requirements are not implemented.
THESE INSTRUCTIONS FORM PART OF THE PRODUCT WARRANTY.

Trapped Key ISOLATOR SWITCH with solenoid control – Type ISP-SKR

TECHNICAL SPECIFICATIONS (MAIN ISOLATOR BLOCK):

				ISB1 25A	ISB1 40A	ISB2 63A	ISP 25A	ISP 40A	ISP 63A
IEC & EN		Volts	V	690	690	690	690	690	690
UL		Volts	V	600	600	600	600	600	600
Main switch isolating voltage up to		Volts	V	750	750	750	750	750	750
Rated impulse withstand voltage Uimp		Volts	kV	6	6	6	6	6	6
Rated uninterrupted current Iu		Amps	A	20	32	40	25	40	63
Rated Operational Current Ie									
IEC & EN	AC-22A	Up to 690V	A	20	32	40	25	40	63
	AC-21A	Up to 690V	A	25	40	63	32	63	80
	AC-1	Up to 690V	A	25	40	63	32	63	80
Rated Operational Power AC-23A (50-60Hz)									
IEC & EN	3 Phase	220-240V	kW	7.5	15	22	11	22	30
		380-440V	kW	15	22	45	22	45	45
		500-690V	kW	15	22	45	22	45	45
Rated Operational Power AC-3 (50-60Hz)									
IEC & EN	3 Phase	220-240V	kW	5.5	11	15	8	15	22
		440V	kW	11	15	30	15	30	30
		690V	kW	11	15	30	15	30	30
UL Power Rating									
DOL	3 Phase	120V	hp	1.5	3	5	3	5	7.5
		240V	hp	3	7.5	10	7.5	10	15
		480V	hp	7.5	20	20	15	20	25
		600V	hp	10	25	30	20	30	30
	1 Phase	120V	hp	0.5	2	3	1.5	3	3
		240V	hp	1.5	3	5	2	5	7.5
UL Short Circuit Ratings									
Fuse Rating, Class J		Amps	A	-	45	70	45	70	70
Fuse Rating, Class RK5		Amps	A	20	-	-	-	-	-
Rated Fuse Short Circuit Current		Amps	kA	10	10	10	10	10	10
Short Circuit Capacity (IEC)									
Maximum Fuse Size Type gl		Amps	A	20	32	63	32	63	63
Rated Fuse Short Circuit Current		Amps	kA	5	30	30	30	30	30
Terminal Specification									
Single/Multiple Strand Wire			Min-mm^2	2.5	2.5	2.5	2.5	2.5	2.5
			Max-mm^2	10	10	25	10	25	25
Fine Strand with Sleeve			Min-mm^2	0.75	0.75	2.5	0.75	2.5	2.5
			Max-mm^2	6	6	10	6	10	10
American Wire Gauge			AWG	10	10	6	10	6	6
Recommended Tightening Torque			Nm	1.7	1.7	2.0	1.7	2.0	2.0

SCHEMATIC (Main Isolator):



TECHNICAL SPECIFICATION:

Mechanical Life (B10d) 1,000,000 cycles
Ambient temperature -20C / 40C.
Solenoid wattage 10Watt (24V)

Trapped Key ISOLATOR SWITCH with solenoid control – Type ISP-SKR

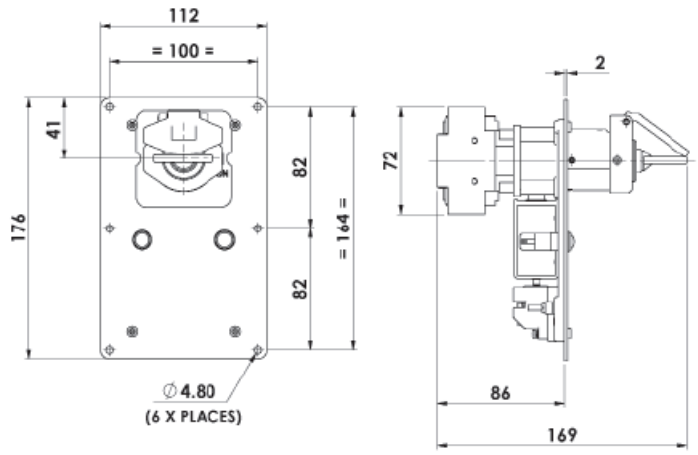

Isolation Switch Panel Model ISP-SKR

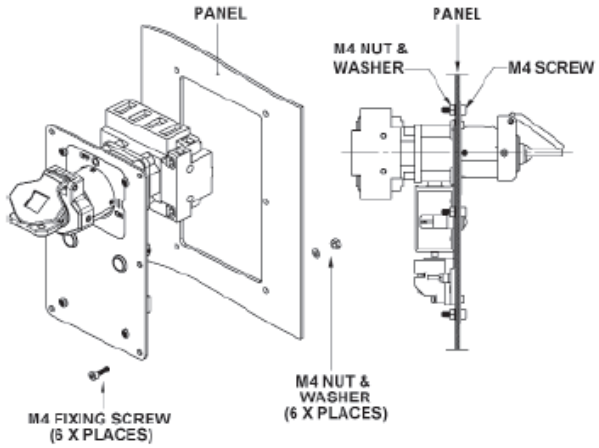

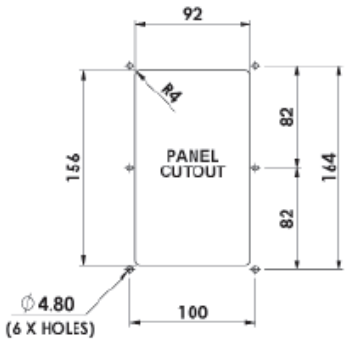

Isolation Switch Panel Mount ISP-SKR - Fitting Diagram

Trapped Key ISOLATOR SWITCH with solenoid control – Type ISP-SKR

IDEM SAFETY SWITCHES Ltd., 2 Ormside Close, Hindley Industrial Estate, Hindley Green, Wigan, WN2 4HR UK. Tel: +44 (0)1942 257070 Fax.: +44 (0)1942 257076
IDEM (USA) 4416 Technology Drive, Fremont, CA 94538 Tel:510-445-0751 Fax:1866-431-7064 email: sales@idemsafety.com Web: www.idemsafety.com Doc.102655 Mar.18