HENGSTLER

TYPE 636-DC

TECHNICAL DATASHEET

„New“ hour meter 37 x 24 mm / 1.45" x 0.95"

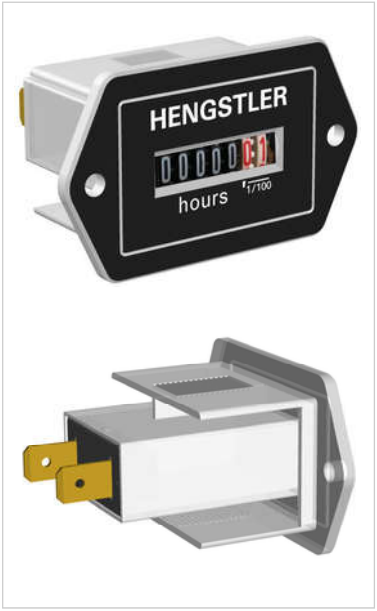

- Standard cut out size 37 x 24 mm [0.95" x 1.45"]
- Best-in-class mounting depth 43,8 mm [1.72"]
- Wide temperature range
- IP 67 for both the product and the enclosure
- Standard electrical connection - 6,3 mm [1/4"] male blade
- High vibration stability and shock resistance
- Low power consumption
- Modifications upon customer request possible

TECHNICAL DATA

Display	7-digit (5 hours + 2 decimal)
Counting range	0 ... 99 999,99 h
Digit height	4 mm [0.16"]
Colour of figures	hours: white on black decimals: red on white (different colour options available upon request)
Supply voltage	5-30 VDC protected for reverse polarity
Power consumption	approx. 30 mW
Electrical connnection	6,3 mm [1/4"] male blade terminals
Accuracy	±0,02% [200ppm] at permanent power supply (100% Duty Cycle)
Mounting	2-hole screw mounting Included: 1 x sealing 2 x Phillips pan head screw (M 3 x 12mm), 2 x lock washer and 2 x hex nut; all with black oxide finish
Panel cutout size	37 x 24 mm [1.45" x 0.95"]
Max. panel thickness	5 mm [0.197“]
Mounting position	horizontal figure wheel shaft

ENVIRONMENTAL DATA

Protection class	IP67 for product (fully sealed) IP67 for enclosure, after installation into the panel, using original mounting accessories acc. DIN EN 60 529 (IEC 529 / VDE 047 T1)
Operating and Storage temperature	-40 ... +85°C [-40 ... 185°F]
Vibrostability	20 g at 10 ... 80Hz 15 g at 10 ... 500 Hz
Shock stability	350 g acc. to IEC 068-2-27
General design	acc. to DIN VDE 0700; insulation group C (VDE 0110), protection class II
Weight	26 g (inclulding mounting accessories)

CONNECTION DIAGRAM

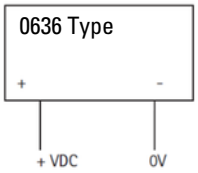

Activation: The counter is connected to + VDC and 0 V.
The product is protected for reverse polarity.

Specifications subject to change without notice.

HENGSTLER

TYPE 636-DC

TECHNICAL DATASHEET

„New“ hour meter 37 x 24 mm / 1.45" x 0.95"

DIMENSIONS

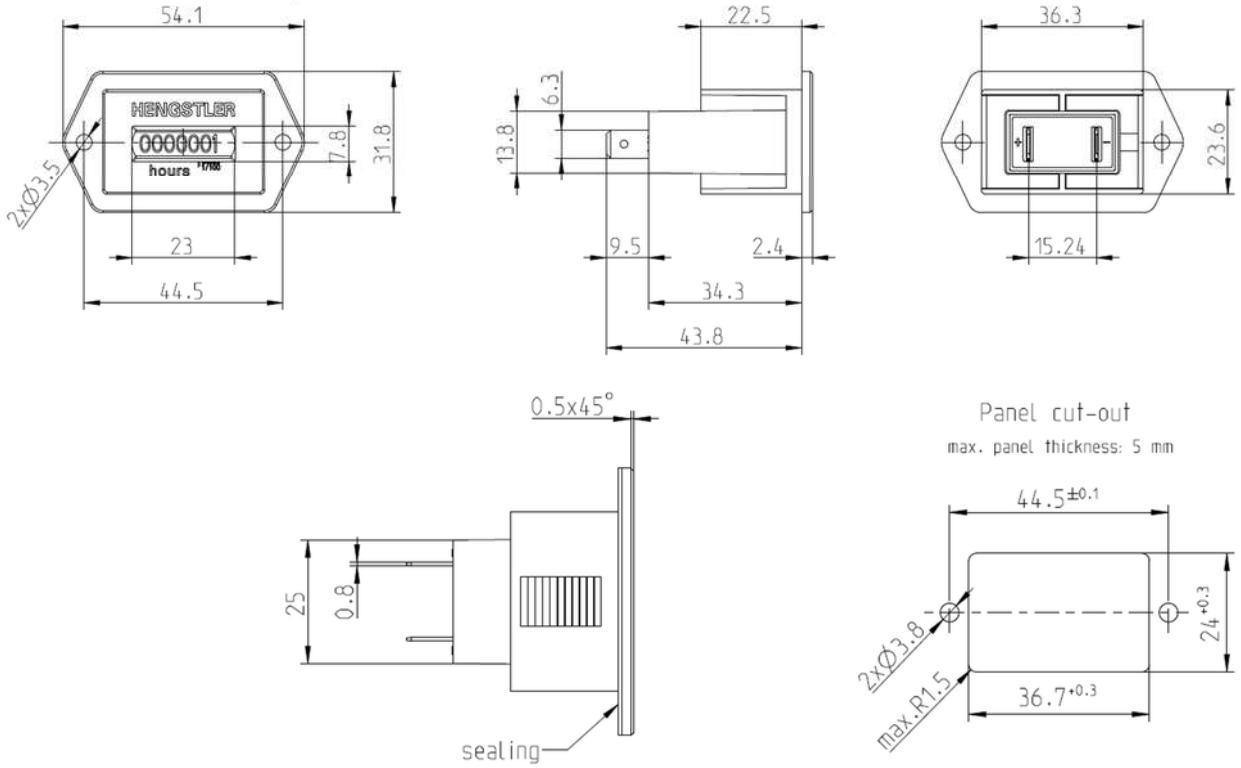

Dimensions in mm

ORDERING INFORMATION

Voltage	Last 2 digits (decimals)	Ordering code
5 - 30 VDC	Red on White background	0 636 001
	White on Black background	0 636 002



0 636 001



0 636 002



0 636 101
Retainer mount version - on request

Specifications subject to change without notice.