Part Number:	**BU-43PR-***
Description:	**Insulator for Plier-Type Clip**

3107

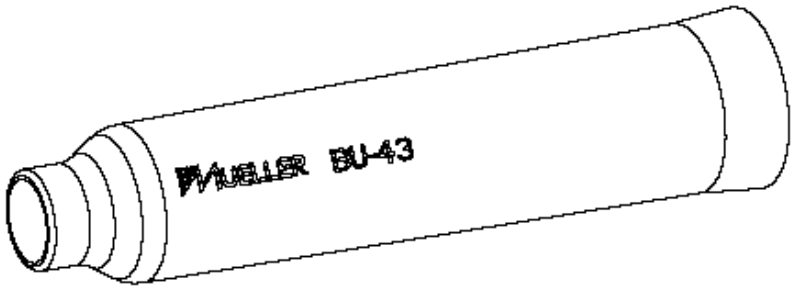

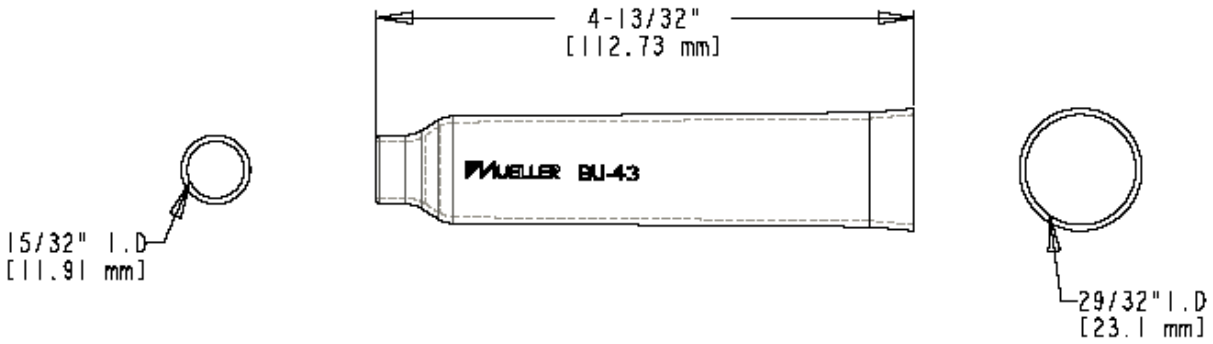

- Insulator for Plier-Type Clip
- Protective flexible vinyl insulator for BU-41
- Material: PVC
- Length: 4.4” (112.73 mm)
- *Std. Colors: -0 Black, -2 Red, -4 Yellow ,-5 Green ,-6 Blue ,-9 White
- RoHS Compliant

Mueller Electric Company
1625 E. 31st Street
Cleveland, Ohio 44114

ISO 9001:2000
Over 95 Years Of Innovation
www.muellerelectric.com

TEL. 800-955-2629
TEL. 216-771-5225
FAX. 216-771-3068