Audio Connector, Plug, 3.5 mm, 3-pole, solder terminal, insulated, angled



Description

- Solder terminal:
  for cable mounting
- Audio entrances and exits
- Data and Signal transfer
- Audio Plug: 3-pole, insulated, angled

References

Alternative: Housing shielded 4832.1300

Weblinks

pdf-datasheet, html-datasheet, General Product Information, RoHS, CHINA-RoHS, REACH, Mating Connectors, e-Shop, SCHURTER-Stock-Check, Distributor-Stock-Check

Technical Data

Diameter	3.5 mm
Number of Poles	3-pole
Ratings DC	0.5 A / 30 VDC
Ratings AC	0.5 A / 30 VAC
Dielectric Strength	500 VDC
Insulation Resistance	> 100 MΩ @ 500 VDC

Allowable Operation Temp.	-20 °C to 70 °C
Terminal	solder terminal nickel-plated
Housing	insulated
Style	angled
Lifetime	5000 Insertions

Dimensions

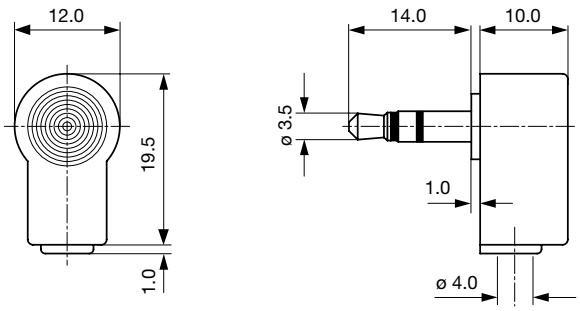

Cable diameter max. 4.0 mm

All Variants

Product group	Diameter [mm]	Number of Poles	Terminal	Order Number
Audio Plug/Sockets	3.5	3-pole	solder terminal	4832.1320

Availability for all products can be searched real-time:http://www.schurter.com/en/Stock-Check/Stock-Check-SCHURTER

Packaging unit 100 Pcs

Mating Outlets/Connectors



Category / Description	
Audio Plug/Sockets Overview complete	
Audio Connector, Socket, 3.5 mm, 3-pole, solder terminal, shielded	4832.2300
Audio Connector, Socket, 3.5 mm, 3-pole, solder terminals for PCB, shielded	4832.2320
Audio Connector, Socket, 3.5 mm, 3-pole, solder terminals for PCB, insulated	4832.2330
Audio Connector, Plug, Inline Socket, 3.5 mm, 3-pole, solder terminal, insulated	4832.3300
Audio Plug/Sockets further types to 4832 Audio-Stecker, D=3,5mm	

The specifications, descriptions and illustrations indicated in this document are based on current information. All content is subject to modifications and amendments. Information furnished is believed to be accurate and reliable. However, users should independently evaluate the suitability and test each product selected for their own applications.