Product data sheet
Characteristics

XS612B3DBL2
inductive sensor XS6 M12 - L35mm - brass - Sn4mm - 12..24VDC - cable 2m



Main

Range of product	OsiSense XS
Series name	General purpose
Sensor type	Inductive proximity sensor
Device application	-
Sensor name	XS6
Sensor design	Cylindrical M12
Size	35 mm
Body type	Fixed
Detector flush mounting acceptance	Flush mountable
Material	Metal
Type of output signal	Discrete
Wiring technique	2-wire
[Sn] nominal sensing distance	4 mm
Discrete output function	1 NC
Output circuit type	DC
Electrical connection	Cable
Cable length	2 m
[Us] rated supply voltage	12...24 V DC with reverse polarity protection
Switching capacity in mA	<= 100 mA DC with overload and short-circuit protection
IP degree of protection	IP68 double insulation conforming to IEC 60529 IP69K conforming to DIN 40050

Complementary

Thread type	M12 x 1
Detection face	Frontal
Front material	PPS
Enclosure material	Nickel plated brass

Disclaimer: This documentation is not intended as a substitute for and is not to be used for determining suitability or reliability of these products for specific user applications

Operating zone	0...3.2 mm
Differential travel	1...15% of Sr
Cable composition	2 x 0.34 mm²
Wire insulation material	PvR
Status LED	1 LED (yellow) for output state
Supply voltage limits	10...36 V DC
Switching frequency	<= 2000 Hz DC
Voltage drop	<= 4 V, closed state
Delay first up	<= 10 ms
Delay response	<= 0.3 ms
Delay recovery	<= 0.3 ms
Marking	CE
Threaded length	25 mm
Length	35 mm
Product weight	0.09 kg

Environment

Product certifications	CSA UL
Ambient air temperature for operation	-25...70 °C
Ambient air temperature for storage	-40...85 °C
Vibration resistance	25 gn, amplitude: +/- 2 mm (f = 10...55 Hz) conforming to IEC 60068-2-6
Shock resistance	50 gn (duration = 11 ms) conforming to IEC 60068-2-27

Offer Sustainability

Sustainable offer status	Green Premium product
RoHS (date code: YYWW)	Compliant - since 1004 - Schneider Electric declaration of conformity Schneider Electric declaration of conformity
REACh	Reference not containing SVHC above the threshold Reference not containing SVHC above the threshold
Product environmental profile	Available Product environmental
Product end of life instructions	Available End of life manual

Contractual warranty

Warranty period	18 months

XS612B3DBL2

Dimensions

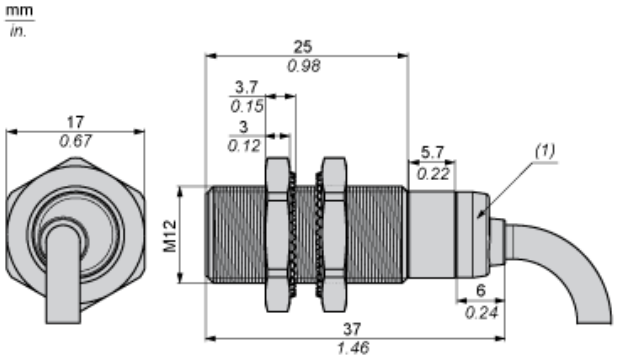

(1) LED

Minimum Mounting Distances

Side by side

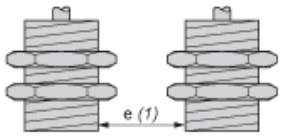

e (1) ≥ 8 mm/0.31 in.

Face to face

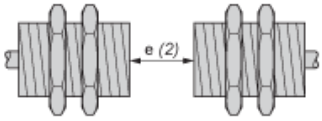

e (2) ≥ 48 mm/1.89 in.

Facing a metal object

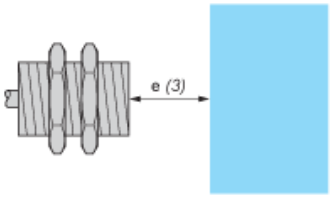

e (3) ≥ 12 mm/0.47 in.

Mounting

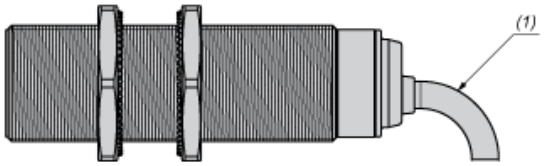

(1) Bending cable: 4 x external cable diameter

Wiring Schemes

2-Wire Non-polarised

NC output

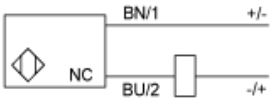

BU : Blue
BN : Brown