Rolling bearings and seals in electric motors and generators

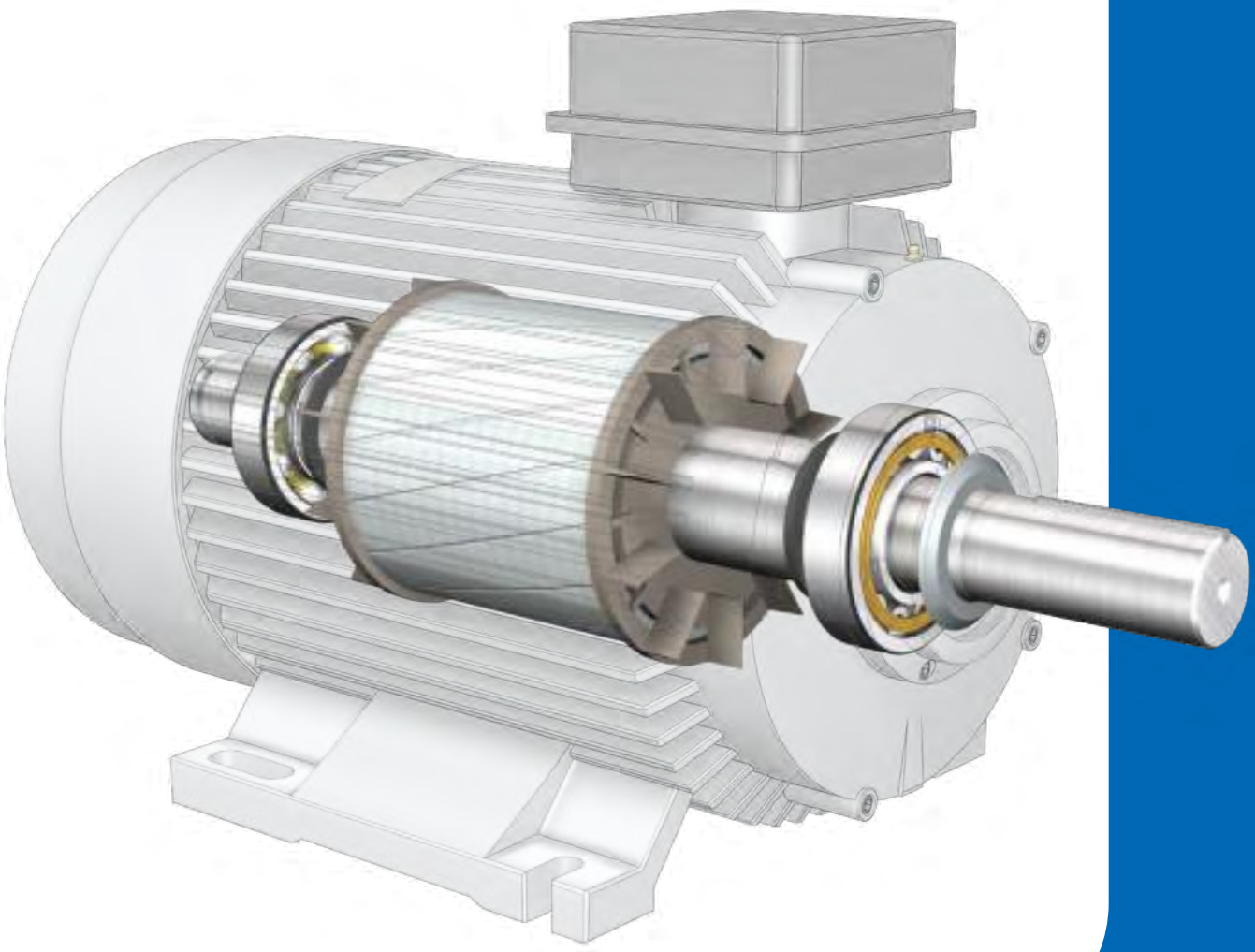

® SKF, @PTITUDE, BAKER, CARB, DUOFLEX, DURATEMP, ICOS, INSOCOAT, MARLIN, MICROLOG, MONOFLEX, MULTILOG, SEAL JET, SKF EXPLORER, SYSTEM 24 and WAVE are registered trademarks of the SKF Group.

© SKF Group 2013
The contents of this publication are the copyright of the publisher and may not be reproduced (even extracts) unless permission is granted. Every care has been taken to ensure the accuracy of the information contained in this publication but no liability can be accepted for any loss or damage whether direct, indirect or consequential arising out of the use of the information contained herein.

PUB 54/P7 13459 EN · August 2013

This publication supersedes publication 5230 E and 6230 EN.

Certain image(s) used under license from Shutterstock.com.

1 Rolling bearings in electric machines

2 Bearing systems

3 Seals in electric machines

4 Tolerances and fits

5 Lubrication

6 Bearing mounting, dismounting and motor testing

7 Bearing damage and corrective actions

8 SKF solutions

Rolling bearings and seals in electric motors and generators

A handbook for the industrial designer and end-user

Foreword

This SKF applications, lubrication and maintenance handbook for bearings and seals in electric motors and generators has been developed with various industry specialists in mind. For designers of electric machines[1)]*, this handbook provides the information needed to optimize a variety of bearing arrangements. For specialists working in various industries using electric machines, there are recommendations on how to maximize bearing service life from appropriate mounting, maintenance and lubrication.*

The recommendations are based on experience gained by SKF during decades of close cooperation with manufacturers and users of electric machines all over the world. This experience, along with customer input, strongly influences product development within SKF, leading to the introduction of new products and variants.

General information about the selection and calculation of rolling bearings is provided in the SKF Rolling Bearings Catalogue. This publication deals with questions arising from the use of rolling bearings in electric motors and generators. Data from the SKF Rolling Bearings Catalogue is only repeated here when it is necessary for the sake of clarity.

[1)] In this handbook, when the term electric machine is used, it refers to both an industrial electric motor and a generator. When we talk about motors in this handbook, we also mean generators.

Contents

SKF – the knowledge engineering company 6

Our knowledge – your success 7

1 Rolling bearings in electric machines . . . 8

Design requirements 9

Bearing selection 15

Calculation example 16

Deep groove ball bearings 20

Cylindrical roller bearings 24

INSOCOAT bearings 26

Hybrid bearings 28

Angular contact ball bearings 30

Spherical roller bearings 32

CARB toroidal roller bearings 34

Spherical roller thrust bearings 36

2 Bearing systems 38

Selecting a bearing system 39

Preloading with springs 49

3 Seals in electric machines 52

Design requirements 54

Integral bearing seals 55

Shaft seals 57

Special seals 62

4 Tolerances and fits 64

Shaft and housing tolerances 66

Recommended fits 68

5 Lubrication 72

Lubrication 73

Grease lubrication 74

Grease selection 76

Relubrication intervals 80

Grease life for capped bearings 86

Oil lubrication 88

6 Bearing mounting, dismounting and motor testing 92

Mounting 94

Mounting methods 96

Dismounting 101

Motor testing and preparing for transport 105

7 Bearing damage and corrective actions . . 108

Bearing damage 110

Root cause analysis 110

Fatigue 111

Wear 112

Corrosion 114

Electrical erosion 116

Plastic deformation 121

Fracture and cracking 122

8 SKF solutions 124

SKF Engineering Consultancy Services 126

SKF calculation tools 127

Application specific solutions 128

Condition monitoring technologies and service 135

Certification program for electric motor service companies 141

SKF – the knowledge engineering company





From one simple but inspired solution to a misalignment problem in a textile mill in Sweden, and fifteen employees in 1907, SKF has grown to become a global industrial knowledge leader. Over the years we have built on our expertise in bearings, extending it to seals, mechatronics, services and lubrication systems. Our knowledge network includes 46 000 employees, 15 000 distributor partners, offices in more than 130 countries, and a growing number of SKF Solution Factory sites around the world.

Research and development

We have hands-on experience in over forty industries, based on our employees' knowledge of real life conditions. In addition our world-leading experts and university partners who pioneer advanced theoretical research and development in areas including tribology, condition monitoring, asset management and bearing life theory. Our ongoing commitment to research and development helps us keep our customers at the forefront of their industries.

Meeting the toughest challenges

Our network of knowledge and experience along with our understanding of how our core technologies can be combined helps us create innovative solutions that meet the toughest of challenges. We work closely with our customers throughout the asset life cycle, helping them to profitably and responsibly grow their businesses.

Working for a sustainable future

Since 2005, SKF has worked to reduce the negative environmental impact from our own operations and those of our suppliers. Our continuing technology development introduced the SKF BeyondZero portfolio of products and services which improve efficiency and reduce energy losses, as well as enable new technologies harnessing wind, solar and ocean power. This combined approach helps reduce the environmental impact both in our own operations and in our customers'.

SKF Solution Factory makes SKF knowledge and manufacturing expertise available locally, to provide unique solutions and services to our customers.



Working with SKF IT and logistics systems and application experts, SKF Authorized Distributors deliver a valuable mix of product and application knowledge to customers worldwide.



Our knowledge – your success

SKF Life Cycle Management is how we combine our technology platforms and advanced services, and apply them at each stage of the asset life cycle, to help our customers to be more successful, sustainable and profitable.

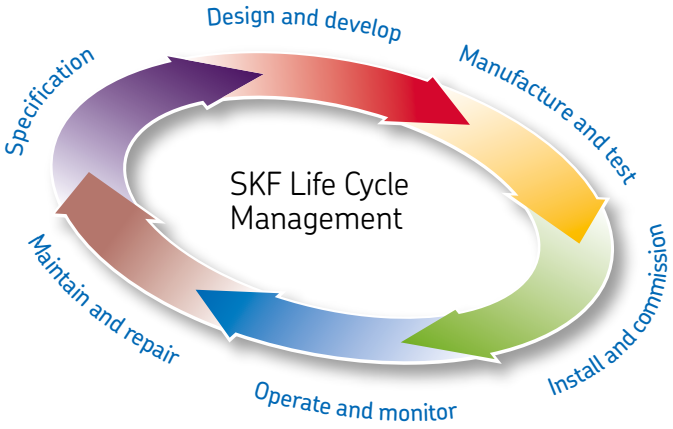

Working closely with you

Our objective is to help our customers improve productivity, minimize maintenance, achieve higher energy and resource efficiency, and optimize designs for long service life and reliability.

Innovative solutions

Whether the application is linear or rotary or a combination of the two, SKF engineers can work with you at each stage of the asset life cycle to improve machine performance by looking at the entire application. This approach doesn't just focus on individual components like bearings or seals. It looks at the whole application to see how each component interacts with the next.

Design optimization and verification

SKF can work with you to optimize current or new designs with proprietary 3-D modeling software that can also be used as a virtual test rig to confirm the integrity of the design.



Bearings
SKF is the world leader in the design, development and manufacture of high performance rolling bearings, plain bearings, bearing units and housings.



Machinery maintenance
Condition monitoring technologies and maintenance services from SKF can help minimize unplanned downtime, improve operational efficiency and reduce maintenance costs.



Sealing solutions
SKF offers standard seals and custom engineered sealing solutions to increase uptime, improve machine reliability, reduce friction and power losses, and extend lubricant life.



Mechatronics
SKF fly-by-wire systems for aircraft and drive-by-wire systems for off-road, agricultural and forklift applications replace heavy, grease or oil consuming mechanical and hydraulic systems.



Lubrication solutions
From specialized lubricants to state-of-the-art lubrication systems and lubrication management services, lubrication solutions from SKF can help to reduce lubrication related downtime and lubricant consumption.



Actuation and motion control
With a wide assortment of products – from actuators and ball screws to profile rail guides – SKF can work with you to solve your most pressing linear system challenges.

1 Rolling bearings in electric machines

Design requirements 9

Bearing selection 15

Calculation example 16

Deep groove ball bearings 20

Cylindrical roller bearings 24

INSOCOAT bearings 26

Hybrid bearings 28

Angular contact ball bearings . . 30

Spherical roller bearings 32

CARB toroidal roller bearings . . 34

Spherical roller thrust bearings 36

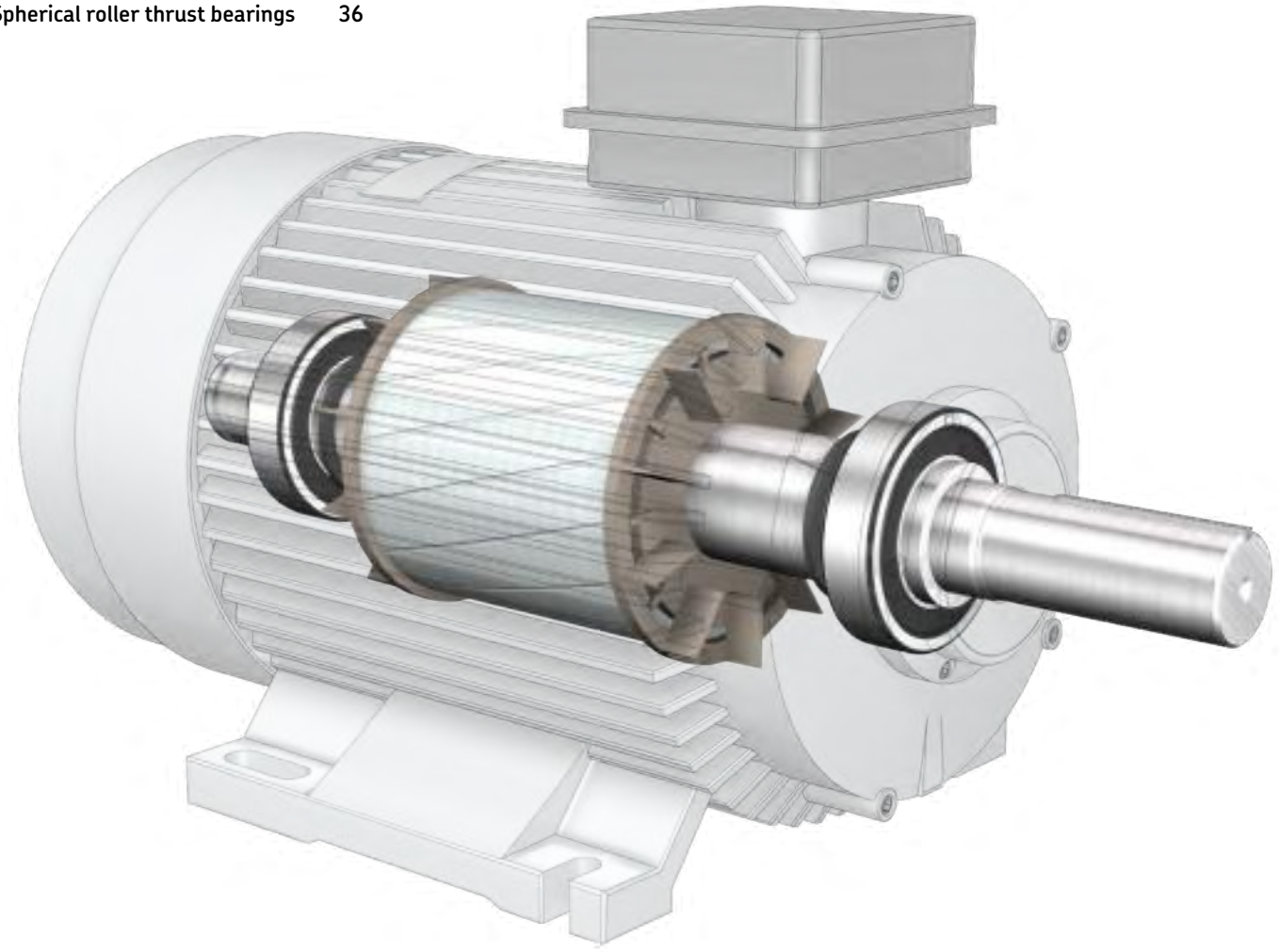

Rolling bearings in electric machines

The purpose of using rolling bearings in electric machines is to support and locate the rotor, to keep the air gap small and consistent and to transfer loads from the shaft to the motor frame. The bearings should enable high and low speed operations, minimize friction, and save power. The designer has to consider many different parameters when selecting the bearing type and arrangement to meet the requirements of any particular motor application. Under all circumstances, the design should be economical from both a manufacturing and a maintenance perspective.

Design requirements

The design parameters of an electric machine are generally found to be power output, boundary dimensions, and shaft and housing materials. In the case of an induction motor, the number of poles required is also an important design parameter.

Other important considerations include the expected operating conditions, the required uptime or availability, maintenance requirements as well as manufacturing methods (→ **fig. 1**, **page 10**).

Mounting and dismounting procedures (→ **chapter 6**, **page 93**) need to be considered at the design stage.

Selecting the proper lubricant and lubrication method (→ **chapter 5**, **page 73**) can also have a significant impact on the service life of the rolling bearings.

Condition monitoring (→ **chapter 8**, **page 135**) can reduce unplanned breakdowns and improve reliability.

The following pages present the most important considerations and steps to remember during the design process (→ **table 1**, **page 11**). An example of the design process related to an electric motor is also included.

Dimensions

In most cases, power output determines shaft size, and shaft size determines the bore diameter of the bearings. In recent years, the tendency has been to use bearings with smaller cross sections because they require less space.

Loads

In order to select the best bearing for a particular application, all operational loads should be taken into account. In addition to the weight of the components, the forces created when power is transmitted, such as those listed below, should also be considered:

- the magnetic pull resulting from asymmetrical air gaps
- dynamic forces due to misalignment
- out-of balance forces
- forces due to pitch errors in gears
- thrust loads

Loads can be radial, axial or a combination of the two. In cases where there are heavy loads, roller bearings are typically used. Ball bearings are generally used for lighter loads.

Certain bearings, such as N and NU type cylindrical roller bearings, accommodate radial loads only while other bearings, such as angular contact ball bearings, are better suited for combined loads.

In order to provide satisfactory operation, ball and roller bearings must always be subjected to a given minimum load. Refer to the relevant bearing type in the table section of the *SKF Rolling Bearings Catalogue*.

Fig. 1

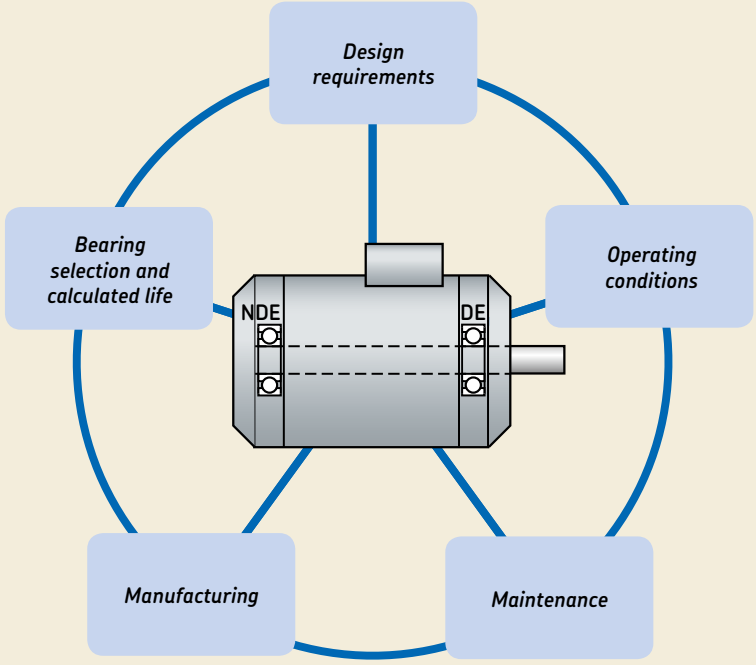

Parameters that have to be taken into consideration when designing an electric machine.
NDE = Non-drive end
DE = Drive end

Table 1

Important parameters to consider when selecting the appropriate bearings for an electric motor or generator

Design considerations and operating conditions	Manufacturing
• Boundary dimensions • Magnitude and direction of loads • Speed: fixed, variable or high • Shaft and housing materials • Coupling, belt or gear drive • Horizontal or vertical mounting • Environment • Vibration level • Noise level • Temperature • Required bearing life • Lubrication: grease versus oil • Maintenance • Condition monitoring • Sealing (integral and/or external)	• Product availability • Required precision • Handling and transportation • Mounting tools

Speed

Operating speed influences both bearing and lubricant life. Size, cage design, lubrication, clearance and seal type, must be considered when choosing the bearing.

Fixed speed

In an induction motor, the number of poles and its supply frequency determine the speed. For example, the maximum speed for a two-pole motor at 50 Hz is 3 000 r/min and at 60 Hz 3 600 r/min.

Variable speed

If the machine is to operate at different speeds during its duty cycle, all speed intervals should be taken into consideration when dimensioning the bearing and calculating bearing life.

Induction motors using frequency converters to vary their speed require special consideration for bearing selection. Modern frequency converters using pulse width modulation (PWM) and fast switching semiconductor technology often run into problems with electrical erosion in bearings (→ **chapter 7**, **page 116**).

High speed

Normally, ball bearings are more suitable for high-speed applications than roller bearings. In very high-speed applications, high-precision bearings or hybrid bearings may be beneficial. To make that decision, a thorough analysis of the dynamic performance of the machine is necessary. Some of the factors that influence bearing service life at high speeds include the cage, lubricant, running accuracy and clearance of the bearings, the resonance frequency of the system, and the balancing of the rotating components.

Shaft and housing material

Because materials expand and contract when exposed to temperature changes, it is important to take the coefficient of thermal expansion into account when selecting shaft and housing materials. Thermal expansion (and contraction) can have a direct influence on shaft and housing fits (→ **chapter 4**, **page 65**) as well as internal bearing clearance.

Coupling, belt and gear drives

The type of connector used between the drive and driven unit has a direct influence on bearing loads.

There are two kinds of coupling drives: flexible and rigid. Good alignment is important in both cases, otherwise additional forces may be induced into the bearing system and reduce service life. Proper alignment is particularly important with a rigid coupling where three bearings are typically mounted on a shaft. When rigid couplings are aligned very accurately, using laser-aligning equipment for example, the drive end bearing might become relatively unloaded, When this happens, the load is shared between the bearings on the non-drive end and the coupled shaft and a deep groove ball bearing is recommended at the drive end.

A belt or gear drive will generally load the motor bearings more heavily than a coupling drive. Belt and gear drives therefore most often use cylindrical roller bearings at the drive end. In applications where there are heavy loads and the possibility of misalignment and/or shaft deflection, a CARB toroidal roller bearing should be considered.

See also typical arrangements for coupling and belt drives (→ **chapter 2**, **page 39**).

Vertical mounting

When selecting the proper bearing arrangement (→ **chapter 2**, **page 39**), machines that are mounted vertically need special consideration. Also see sealing solutions (→ **chapter 3**, **page 53**) and calculating grease life (→ **chapter 5**, **page 73**). The mechanical stability of a grease is especially important for vertical shaft applications. Based on tests and practical experience, SKF recommends LGHP 2 grease for vertical shafts under normal operating conditions. As a rule of thumb, the relubrication interval and grease life for horizontal shafts should be halved for vertical shafts.

Contact seals should be used, as they are very effective at keeping the lubricant in and contaminants out of the bearing cavity.

Environment

Seals and shields should be used in damp and dusty environments to protect the bearings. Motors used in remote locations may also require seals and shields to create a low maintenance or maintenance-free variant. The type of seal or shield used will determine the maintenance requirements and the service life of the bearing. Different shield and seal options are discussed in **chapter 3**, **page 53**.

Temperature

To properly select or design an electric machine, it is important to know the ambient temperature range and the normal operating temperature of the machine. Knowing these temperature ranges will help determine the most effective cooling method: air, oil or water.

Normal operating temperature for bearings in an electric motor range from 70 to 110 °C (*160* to *230 °F*). As a result, SKF recommends using grease that has good performance characteristics over a wide range of temperatures. In applications where temperatures exceed 110 °C (*230 °F*), high temperature greases are available from SKF (→ **chapter 5**, **page 73**).

In applications where ambient temperatures vary significantly from the bearing operating temperature, a temperature difference over the bearings can result. If the difference is significant, check the resultant internal bearing clearance so as to avoid unnecessary bearing preload. To calculate the clearance reduction caused by temperature difference, contact the SKF application engineering service.

Vibration

In environments where machinery is subjected to vibrations caused by an external source, the use of ball bearings is generally recommended whenever possible. Ball bearings, especially when preloaded with springs, are less sensitive to damage (→ **chapter 7**, **page 109**) that could be caused by external vibrations.

Quiet running

Motors and generators are expected to run quietly. Therefore, it is important to select a bearing with the best combination of cage material, lubricant and internal clearance. SKF bearings already have very low noise levels. However, the levels can be further reduced by preloading the bearing arrangement with springs (→ **chapter 2**, *Preloading with springs*, **page 49**). Appropriate dimensional and geometric tolerances for the motor shaft, housing and covers, that limit bearing misalignment, can further reduce noise levels.

Bearing life

Under controlled laboratory conditions, seemingly identical bearings operating under identical conditions have different endurance lives. A clearer definition of the term "bearing life" is therefore essential to calculate bearing size. All information presented by SKF with regard to load ratings and bearing life is based on the life that 90% of a sufficiently large group of apparently identical bearings can be expected to attain or exceed.

The life of a rolling bearing is expressed as the number of revolutions or the number of operating hours at a given speed that the bearing is capable of enduring before the first sign of metal fatigue (spalling) occurs on a raceway of the inner or outer ring or a rolling element.

The rated life based on the above definition has to satisfy the requisite life expectations of the bearing application.

The observed life of a bearing in a particular application depends to a large extent on the operating conditions. Failures can be caused by any of the following:

- electrical regime, for example, causing electric erosion
- mechanical errors caused, for example, by unsuitable shaft/housing fits, misalignment, improper mounting procedures
- the ingress of contaminants caused, for example, by an unsuitable sealing system and worn or damaged seals, resulting in abrasive wear, poor lubrication conditions, corrosion
- unforeseen load conditions caused, for example, by unbalance resulting in excessive loads; or very light loads, which can lead to skidding rolling elements
- bad lubrication conditions resulting from wrong grease type, wrong grease amount, too low or too high operating temperatures

When a bearing fails prematurely, the bearing should be examined carefully in order to determine the root cause of the failure. By doing so, corrective actions can then be taken.

The life specified by a motor manufacturer is generally based on hypothetical load and speed data. For example, nominal life at the maximum allowable load is 20 000 hours minimum.

Under specific operating conditions, SKF bearings can attain a much longer life than predicted by normal or traditional life calculation methods, particularly when loads are light. These specific conditions prevail when a lubricant film effectively separates the rolling surfaces (raceways and rolling elements) and when surface damage caused by contaminants is limited.

In cases where there are shock loads or pronounced peak loads, the static safety factor should be evaluated.

For appropriate calculation methods, refer to **page 63 ff** in the *SKF Rolling Bearings Catalogue* or the calculation tools online via skf.com.

When selecting greased-for-life bearings in electric machines, the system life most often will be limited by the grease life (→ **chapter 5**, **page 86 ff**). Therefore, bearing life and grease life need to be verified.

Lubrication: grease versus oil

The choice between grease lubrication and oil lubrication is chiefly determined by certain application requirements.

Grease should be used in applications where the following requirements apply:

- easy and simple maintenance
- limited risk of lubricant leaking
- additional protection against contaminants

Oil lubrication should be used in applications where additional cooling is required to attain normal operating temperatures because of an external heat source or excess heat generated by the machine or its bearings at high speed.

Note

A temperature rise due to friction in the bearing is generally lower with grease than with an oil bath, provided that the appropriate type and amount of grease is used and that it is supplied to the bearing in a suitable manner.

Oil lubrication should be used when the relubrication interval (→ **chapter 5**, **page 80**) for grease is short.

Maintenance

Electric motor maintenance typically includes lubricating the bearings, servicing the stator windings in case it is required and monitoring the performance of the motor.

For motors equipped with bearings that are sealed and greased for life, relubrication is not possible and the motor is considered to be maintenance free in terms of bearing lubrication. In this case, obviously, the grease life of the bearing should be considered.

Condition monitoring

With the methods and equipment available today, bearing condition can be effectively monitored and diagnosed. Suitable procedures for condition monitoring of electric motors are:

- Comparative measurements on a number of identical motors running under the same operating conditions. In addition to bearing condition, SKF provides a full spectrum of static, dynamic and online motor test and also monitoring equipment. Additional information is available in **chapter 8**, **page 135**.
- Trend measurements on a motor at given intervals to observe the change in bearing condition.

SKF has developed the tools and the knowledge base to effectively measure, trend, and diagnose bearing condition, insulation and circuit faults, motor health and performance issues.

Product availability

During the design stage, SKF recommends checking product availability with your local SKF representative.

Handling, tools and transport

Rolling bearings are precision products that must be handled carefully if they are to perform properly. When mounting or dismounting bearings, it is important to use the correct methods and tools. Additional information can be found in **chapter 6**, **page 93**.

To prevent premature bearing failure, it is also important to prepare the motor properly for transport (→ **chapter 6**, **page 105**).

Precision

The required accuracy of any machine determines the required precision of the bearings. Bearings with higher precision are available for high accuracy/high speed machinery. However, for a machine to benefit from the running accuracy of its bearings, the accuracy of cylindrical seats on shafts and in housing bores and on support surfaces (abutments for bearings provided by shaft and housing shoulders etc.) should correspond to the accuracy of the bearings used. Geometrical tolerances for bearing seats on shafts and in housings are shown in **chapter 4**, **page 65**.

Bearing selection

Electric motors and generators use a wide variety of bearing types including deep groove ball bearings, angular contact ball bearings, cylindrical roller bearings, spherical roller bearings, CARB toroidal roller bearings and spherical roller thrust bearings.

In small horizontal machines, the most common arrangement consists of two deep groove ball bearings. In larger or heavily loaded machines, roller bearings are typically used.

In vertical machines, deep groove ball bearings, angular contact ball bearings or spherical roller thrust bearings are typically used, depending on the loads, speeds, temperature and environment of the application.

As mentioned earlier, the design requirements and operating conditions of the application will influence the bearing system. Up-to-date bearing data can be found online at skf.com/bearings. A number of examples of bearing systems for electric machines are shown in **chapter 2**, **page 39**.

Bearing internal clearance

Bearing internal clearance is defined as the total distance through which one bearing ring can be moved relative to the other ring in the radial direction (radial internal clearance) or in the axial direction (axial internal clearance).

The internal clearance in ball bearings (not angular contact ball bearings), cylindrical, spherical and CARB toroidal roller bearings is always measured radially. The initial bearing clearance is chosen to accommodate:

- expansion of the inner ring caused by its interference fit on the shaft
- if applicable, compression of the outer ring caused by its interference fit in the housing
- the reduction in radial clearance due to the temperature difference between the inner and outer rings during operation, including start up conditions
- the needed internal clearance during operation

It is important to choose the right initial clearance, as inadequate operating clearances can result in premature bearing failure. For deep groove ball bearings, radial clearance in electric machines is typically one class greater than Normal (suffix C3).

When bearing types other than deep groove ball bearings are used in high speed applications, (where speeds are 70% or higher than the reference speed of the bearing), a C3 clearance should be selected. A C3 clearance should also be used when the temperature difference between the inner and outer rings exceeds 10 °C (*20 °F*). Increased clearances may also be necessary when an interference fit is needed for both bearing rings (usually cylindrical roller bearings).

The noise level of the bearing increases as internal radial clearance increases. Therefore, clearances should be chosen carefully.

If an application is designed for a bearing with C3 clearance, do not use a bearing with Normal clearance. Bearings with Normal clearance have no clearance markings on the outer ring.

Tables for bearing internal clearance can be found in the *SKF Rolling Bearings Catalogue* or online at skf.com/bearings.

Correct preload

When selecting the preload force for a bearing system, it should be remembered that stiffness increases marginally when the preload exceeds a given optimum value and that the resulting friction and heat will decrease the bearing life substantially. **Diagram 1** indicates the relationship between bearing life and preload/clearance. In electric machines, heat dissipation from the rotor or in the stator coils will strongly influence bearing clearance or preload. Because of the risk that excessive preload implies for the operational reliability of a bearing arrangement, and because of the complexity of the calculations normally required to establish the appropriate preload force, it is advisable to contact the SKF application engineering service for support.

Cages

Rolling bearings are available with a variety of cages and cage materials. Each is suited for different applications and operating conditions. Information about some cage types and materials is presented in the discussion on bearing types (*SKF Rolling Bearings Catalogue*, **page 26**). More information about cages and their materials can be found in the *SKF Rolling Bearings Catalogue*, **page 37**.

Calculation example

Electric servomotor

Select bearings for a servomotor with a gear drive for horizontal mounting (→ **fig. 2**). The minimum required bearing life is 30 000 h. The bearing bore diameter needs to be 25 mm on the drive end and 20 mm on the non-drive end. Minimal maintenance is a prerequisite, since the environment contains dust particles from a brake, mounted near the bearing at the non-drive end. Therefore, bearings with a highly effective integral seal should be selected.

Use calculation tools online via skf.com, or the equations in the *SKF Rolling Bearings Catalogue*, **page 64 ff**.

The program will calculate the basic rating life according to ISO, L_{10h}, and the SKF rating life L_{10mh}. The SKF rating life takes into account fatigue load limits, lubrication conditions and contamination levels. Since sealed bearings are greased for life, be sure to check that the grease life of the bearings meets or exceeds the required life of the bearings in the motor. Be aware that motor life is often dependent on the life of the lubricant in greased for life electric motor bearings.

Diagram 1

Relationship between bearing life and preload/clearance

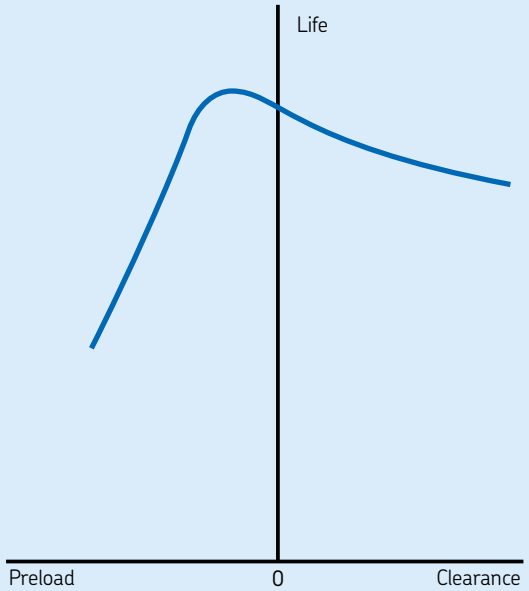

Fig. 2

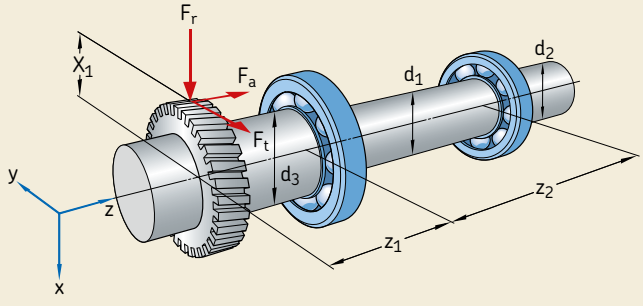

x_1 = 24 mm
z_1 = 55 mm
z_2 = 230 mm
d_1 = 25 mm
d_2 = 20 mm
d_3 = 30 mm

Bearing selection

The most common bearing system for electric motors uses two deep groove ball bearings (→ **chapter 2**, **page 39**). One bearing is located to position the rotor axially and to accommodate the axial load. The non-locating bearing accommodates the thermal elongation of the shaft relative to the housing. In this example, the bearing at the drive end locates the shaft. Assuming there is a temperature difference between the inner and outer rings of the bearing due to heat generated by the rotor, choose a bearing clearance larger than Normal, C3.

When selecting the lubricant for a sealed bearing, the initial approach is to check if the SKF standard grease will be adequate. It has a 70 mm^2/s viscosity at 40 °C *(100 °F)* and has a temperature range of –30 to +110 °C *(–20 to +230 °F)*. For safe operating temperatures, refer to the section *Temperature range – the SKF traffic light concept*, **chapter 5**, **page 75**. To obtain an effective seal, bearings with a contact seal on both sides should be selected.

Life calculations

Use the SKF rating life calculation to select the appropriate bearings for the application. When calculating bearing life for sealed bearings, the contamination factor η_c can generally be set at 0,8. Note: The values for bearings with Normal clearance should be used in this calculation since C3 clearance already accommodates the clearance reduction that results from the temperature difference.

The life requirement is 30 000 h.

SKF rating life

Calculations can be made using the calculation tools online via skf.com, or the equations in the *SKF Rolling Bearings Catalogue*, **page 64 ff**. Results can be found in **tables 2** and **3** on **page 19**.

For the drive end, the SKF rating life of 25 200 h for an 6205-2RSH/C3 SKF Explorer bearing is insufficient. Therefore, a 6305-2RS1/C3 SKF Explorer bearing is selected, indicating an SKF rating life of 236 600 h.

For the non-drive end, the SKF rating life of 128 900 h for 6204-2RSH/C3 SKF Explorer bearing is more than adequate.

Given data

Gear forces			dynamic	static
radial load	F_r	kN	0,50	2,20
tangential load	F_t	kN	1,25	5,45
axial load	F_a	kN	0,55	2,40
Speed	n	r/min	3 000	
Operating temperature	t	°C (°F)	80 *(175)*	

Bearing load calculation

Drive end bearing			dynamic	static
radial load	F_r	kN	1,65	7,19
axial load	F_a	kN	0	0
Non-drive end bearing				
radial load	F_r	kN	0,31	1,35
axial load	F_a	kN	0,55	2,40

Grease life

Grease life calculations are made according to the method described in the section in **chapter 5** entitled *Grease life for capped bearings* on **page 86**. Grease life calculations can also be made according to the calculation tools, available online via skf.com.

Drive end bearing: 6305-2RS1/C3.
The following values are determined:

- From **diagram 5a**, **chapter 5**, **page 87**, the grease life for load conditions C/P = 20 respectively P = 0,05 C. With a grease performance factor GPF = 1, operating temperature t = 80 °C (*175 °F*) and n × d_m value 130 500, the grease life value of 24 500 h is obtained.
- From **table 6**, **chapter 5**, **page 86**, the adjustment factor for increased loads. With C/P = 14,18, an adjustment factor of 0,83 is obtained.

Therefore, grease life is 24 500 × 0,83 ≈ 20 300 h.

Non-drive end bearing: 6204-2RSH/C3.
The following values are determined:

- From **diagram 5a**, **chapter 5**, **page 87**, the grease life for load conditions C/P = 20 respectively P = 0,05 C. With GPF = 1, operating temperature t = 80 °C (*175 °F*) and n × d_m value 100 500, the grease life value of 29 000 h is obtained.
- From **table 6**, **chapter 5**, **page 86**, the adjustment factor for increased loads. With C/P = 13,37, an adjustment factor of 0,80 is obtained.

Therefore, grease life is 29 000 × 0,80 ≈ 23 200 h.

Further considerations

The calculations result in more than adequate SKF rating life for both bearings. However, the grease life is the limiting factor.

Therefore, alternative calculations can be made for the same bearings with grease specifically formulated for applications such as electric motors, designation suffix GJN or WT.

The results of these calculations can be found in **tables 2** and **3** on **page 19**.

Both SKF Explorer bearings with GJN or WT grease fulfil the requirements.

Conclusion

Using sealed bearings with a standard grease fill in this application does not result in the required 30 000 h rating life due to insufficient grease life. By using the same bearings, but with specific greases for electric motors, designation suffix GJN or WT, requirements are met.

The use of SKF Explorer bearings offers a further very interesting possibility: Downsizing. Both bearings can be downsized. Calculations with:

- 6205-2RSH/C3 SKF Explorer bearing at the drive end
- 6004-2RSH/C3 SKF Explorer bearing at the non-drive end
- both bearings with a specific electric motor grease fill, designation suffix GJN or WT

Also fulfil the requirements (→ results in **table 3**, **page 19**).

Bearings in the 62 and 63 series are typically used in electric motors. However, from the calculations above, it is clear that when electric motor designers want to downsize, they can achieve this by using capped SKF Explorer bearings with the appropriate grease. Downsizing can result in not only a smaller motor footprint but also material savings as the width of the motor covers can be reduced.

Table 2

Calculation results[1)]

Bearings			Drive end 6305-2RS1/C3	6305-2RS1/C3GJN	6305-2RS1/C3WT	Non-drive end 6204-2RSH/C3	6204-2RSH/C3GJN	6204-2RSH/C3WT
Dynamic conditions								
Equivalent bearing load	P	kN	1,65	1,65	1,65	1,01	1,01	1,01
Dynamic carrying capacity	C	kN	23,4	23,4	23,4	13,5	13,5	13,5
C/P			14,18	14,18	14,18	13,37	13,37	13,37
Basic rating life	L_{10}	10^6	2 850	2 850	2 850	2 390	2 390	2 390
Basic rating life	L_{10h}	h	15 800	15 800	15 800	13 300	13 300	13 300
Fatigue load limit	P_u	kN	0,49	0,49	0,49	0,28	0,28	0,28
Contamination factor	η_c		0,8	0,8	0,8	0,8	0,8	0,8
$P_u/P \times \eta_c$			0,238	0,238	0,238	0,222	0,222	0,222
Bearing mean diameter	d_m	mm	43,5	43,5	43,5	33,5	33,5	33,5
$n \times d_m$		mm/min	130 500	130 500	130 500	100 500	100 500	100 500
Required viscosity	ν_1	mm^2/s	10,5	10,5	10,5	11,9	11,9	11,9
Grease viscosity at 80 °C	ν	mm^2/s	12,9	21,7	15,8	12,9	21,7	15,8
Kappa value	κ		1,23	2,07	1,51	1,08	1,82	1,32
Life modification factor	a_{SKF}		14,9	40,5	22,8	9,71	27,1	15,0
SKF rating life	$\mathbf{L_{10mh}}$	**h**	**236 600**	**641 400**	**361 100**	**128 900**	**359 200**	**198 500**
Static conditions								
Equivalent bearing load	P_0	kN	7,19	7,19	7,19	2,00	2,00	2,00
Static load carrying capacity	C_0	kN	11,6	11,6	11,6	6,55	6,55	6,55
Static safety factor	$\mathbf{s_0}$		**1,61**	**1,61**	**1,61**	**3,26**	**3,26**	**3,26**
Lubrication[2)]								
Value from diagram	L_{10h}	h	24 500	49 000	78 000	29 000	58 000	92 000
Load adjustment factor			0,83	0,83	0,83	0,80	0,80	0,80
Grease life	$\mathbf{L_{10h}}$	**h**	**20 300**	**40 600**	**64 700**	**23 200**	**46 400**	**73 600**

[1)] All calculations are made according to the calculation tools available online via skf.com.
However, the values of the grease life are from **diagram 5a** on **page 87**. The values are heavily rounded.
[2)] Refer to **chapter 5**, **diagram 5a**, **page 87** and **table 6**, **page 86**.

Table 3

Calculation results – downsizing[1)]

Bearings			Drive end 6205-2RSH/C3	6205-2RSH/C3GJN	6205-2RSH/C3WT	Non-drive end 6004-2RSH/C3	6004-2RSH/C3GJN	6004-2RSH/C3WT
Dynamic conditions								
Equivalent bearing load	P	kN	1,65	1,65	1,65	0,951	0,951	0,951
Dynamic carrying capacity	C	kN	14,80	14,80	14,80	9,95	9,95	9,95
C/P			8,97	8,97	8,97	10,46	10,46	10,46
Basic rating life	L_{10}	10^6	720	720	720	1 150	1 150	1 150
Basic rating life	L_{10h}	h	4 010	4 010	4 010	6 360	6 360	6 360
Fatigue load limit	P_u	kN	0,335	0,335	0,335	0,212	0,212	0,212
Contamination factor	η_c		0,8	0,8	0,8	0,8	0,8	0,8
$P_u/P \times \eta_c$			0,162	0,162	0,162	0,178	0,178	0,178
Bearing mean diameter	d_m	mm	38,50	38,50	38,50	31	31	31
$n \times d_m$		mm/min	115 500	115 500	115 500	93 000	93 000	93 000
Required viscosity	ν_1	mm^2/s	11,1	11,1	11,1	12,4	12,4	12,4
Grease viscosity at 80 °C	ν	mm^2/s	12,9	21,7	15,8	12,9	21,7	15,8
Kappa value	κ		1,16	1,95	1,42	1,04	1,75	1,27
Life modification factor	a_{SKF}		6,28	14,40	8,93	5,99	15,10	8,86
SKF rating life	$\mathbf{L_{10mh}}$	**h**	**25 200**	**57 700**	**35 800**	**38 100**	**96 200**	**56 400**
Static conditions								
Equivalent bearing load	P_0	kN	7,19	7,19	7,19	2,00	2,00	2,00
Static load carrying capacity	C_0	kN	7,8	7,8	7,8	5,0	5,0	5,0
Static safety factor	$\mathbf{s_0}$		**1,08**	**1,08**	**1,08**	**2,50**	**2,50**	**2,50**
Lubrication[2)]								
Value from diagram	L_{10h}	h	26 500	53 000	84 000	31 500	63 000	100 000
Load adjustment factor			0,60	0,60	0,60	0,72	0,72	0,72
Grease life	$\mathbf{L_{10h}}$	**h**	**15 900**	**31 800**	**50 500**	**22 700**	**45 300**	**72 000**

[1)] All calculations are made according to the calculation tools available online via skf.com.
However, the values of the grease life are from **diagram 5a** on **page 87**. The values are heavily rounded.
[2)] Refer to **chapter 5**, **diagram 5a**, **page 87** and **table 6**, **page 86**.



Deep groove ball bearings

Deep groove ball bearings are typically found in both the locating and non-locating positions of small to medium sized electric motors and in the locating position of medium to large sized electric motors and generators. Quiet running is one of the most important advantages that deep groove ball bearings have over other types of rolling bearings. Varied assortment and cost effectiveness also make deep groove ball bearings popular.

There are many other features that make deep groove ball bearings a common choice for electric motors. Deep groove ball bearings have low friction and high-speed capability. They can carry radial, axial and combined loads, making them suitable for use in both the locating and non-locating positions of the motor. Axial springs can be used with non-locating deep groove ball bearings to further reduce noise and vibration levels.

Deep groove ball bearings with seals or shields on both sides are greased-for-life and require no maintenance.

Features and benefits

Features and benefits of SKF deep groove ball bearings include:

- low friction and reduced sensitivity to misalignment due to optimized internal geometry
- in addition to C3 clearance recommended for deep groove ball bearings in electric motors, other clearance classes are also available
- a wide assortment of greased-for-life bearings together with a variety of high performance greases are available including an SKF grease for ultra quiet running and SKF dedicated greases for specific applications
- highly effective sealing options including contact seals, low friction seals and shields

For high performance electric motors, such as frequency inverter fed motors, SKF has capped bearings which contain a specially formulated wide temperature grease (designation suffix WT). This highly effective grease, based on a polyurea thickener with an ester base oil, can be used at temperatures ranging from –40 to +160 °C (*–40* to *+320 °F*). For more information on greases (or lubrication), see **chapter 5, page 73**.

Bearings in electric motors and generators must operate reliably under widely different conditions. As a result, SKF offers the following deep groove ball bearings, which have different performance characteristics:

- SKF Explorer deep groove ball bearings for premium performance
- SKF Energy Efficient deep groove ball bearings, which reduce friction in the bearing and extend bearing performance
- SKF Quiet Running deep groove ball bearings, designed to reduce noise and vibration levels especially in wind turbine generators

SKF Explorer deep groove ball bearings

In response to the ever-demanding performance requirements of modern machinery, SKF developed the SKF Explorer performance class of rolling bearings.

SKF Explorer deep groove ball bearings achieved this substantial improvement in performance by optimizing the internal geometry and surface finish of all contact surfaces, redesigning the cage, combining the extremely clean and homogenous steel with a unique heat treatment and improving the quality and consistency of the balls.

Deep groove ball bearings within this performance class provide superior performance, especially in applications like electric motors, two-wheelers and transmissions. These improvements provide the following benefits:

- higher dynamic load carrying capacity
- reduced noise and vibration levels
- less frictional heat
- significantly longer bearing service life



SKF Energy Efficient (E2) deep groove ball bearings

To meet the ever-increasing demand to reduce friction and energy use, SKF has developed the SKF Energy Efficient (E2) performance class of rolling bearings.

Deep groove ball bearings within this performance class are characterized by a frictional moment in the bearing that is at least 30% lower, compared to a same-sized SKF Explorer bearing when operating under the following conditions:

- speed n > 1 000 r/min
- load P ≤ 0,125 C

In addition to this friction reduction, SKF E2 deep groove ball bearings have been proven to run cooler than comparable SKF Explorer deep groove ball bearings. Tests have shown that SKF E2 deep groove ball bearings can last up to twice as long as comparably capped SKF Explorer deep groove ball bearings.

To achieve these improvements, SKF E2 bearings feature a special low-friction grease and seal, an optimized internal geometry, surface finish and cage.

This design enables SKF E2 deep groove ball bearings to operate at significantly higher speeds than comparably sized capped SKF Explorer deep groove ball bearings.

SKF E2 deep groove ball bearings are available in the 60, 62 and 63 dimension series.

They are supplied with a shield or seal on both sides for dedicated sizes and have C3 radial internal clearance as standard.

The boundary dimensions of SKF E2 deep groove ball bearings are in accordance with ISO 15 and are therefore interchangeable with deep groove ball bearings of the same size and dimension series.

For more details, please contact your local SKF representative or the SKF application engineering service.





SKF Quiet Running deep groove ball bearings, designed and developed especially for wind turbine generators

SKF Quiet Running deep groove ball bearings are designed to comply with applications having stringent noise requirements such as wind turbine generators.

These bearings, which are less sensitive to the variable operating conditions found in wind turbines, can provide consistent performance and a high degree of reliability.

The bearing specification includes both brass and steel cages. The designs of these cages facilitate relubrication by making it easier to get more grease into the bearing free-space. Their design also maximizes the effects of the lubricant. As a result, relubrication intervals can be doubled and bearing service life is increased.

Because they are interchangeable with existing deep groove ball bearings, SKF Quiet Running bearings can be used without modifying the rotor shaft or end shield.

SKF Quiet Running deep groove ball bearings are identified by the designation suffix VQ658. The range covers bearing sizes typically used in wind turbine generators.

For additional information, contact the SKF application engineering service.





Cylindrical roller bearings

Cylindrical roller bearings are typically used in belt or gear driven medium to large sized electric motors, where heavy radial loads prevail. These bearings are usually used as non-locating bearings at the drive end together with a deep groove ball bearing in locating position at the non-drive end. NU and N (→ **fig. 3**) design cylindrical roller bearings are commonly used in electric motors and generators. These bearings have two integral flanges on one ring and no flanges on the other. The flanged ring guides the roller and cage assembly; the ring without flanges accommodates axial displacement of the shaft relative to the housing. Other types of cylindrical roller bearings, such as the NJ and NUP (→ **fig. 4**) designs, have two integral flanges on the outer ring and one flange or two flanges on the inner ring, which means that they can accommodate light axial loads in one or both directions. These are routinely used in vibratory motors.

Fig. 3

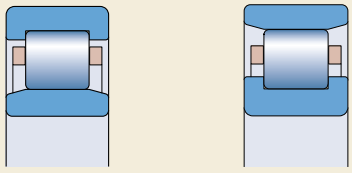

Fig. 4

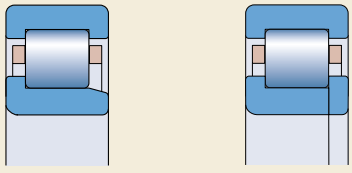

Features and benefits

SKF cylindrical roller bearings have high radial load carrying capacity as well as relatively high-speed capability. Cylindrical roller bearings are separable, the double flanged ring with the roller and cage assembly can be separated from the other ring which simplifies mounting and enables tight shaft and housing fits on both rings.

Options

The number of cylindrical roller bearing configurations is large compared with other bearing types. The various flange configurations (N, NU, NJ and NUP designs) make the bearings suitable for a multitude of applications. Cylindrical roller bearings are available with a choice of different cages. Small bearings have a glass fibre reinforced polyamide 6.6 cage as standard (designation suffix P). The low friction cages are elastic and have good sliding properties. Medium-sized bearings have a window-type steel cage as standard (designation suffix J). These cages can withstand high temperatures and can resist moderate vibration levels. Large bearings have a roller guided brass cage as standard (designation suffix M). These cages can withstand high speeds and can accommodate strong vibration levels and high accelerations. Cylindrical roller bearings with shoulder guided brass cages (designation suffix MA, MB and ML) must be lubricated with oil. For high temperature applications or applications where there is a need for a high degree of chemical resistance, roller centered glass fibre reinforced polyetheretherketone (PEEK) cages are available (designation suffix PH).

Internal clearance

Cylindrical roller bearings can accommodate heavier radial loads than ball bearings. Therefore, they require tighter shaft and housing fits and have higher initial internal clearance values. To compensate for the resulting clearance reduction after mounting, Normal clearance (CN) is usually preferred over C3. With a Normal clearance and a normal fit, the extent of the loaded zone should be appropriate to reduce noise and the risk of smearing. To further reduce noise levels, SKF can provide bearings with C2H (the upper range of C2) clearance.

SKF Explorer cylindrical roller bearings

Developments in the areas of steel production, heat treatment, manufacturing and design have considerably increased the performance of SKF cylindrical roller bearings. SKF Explorer cylindrical roller bearings provide:

- increased load carrying capacity
- more compact machine designs by using smaller bearings
- increased life and higher reliability of existing machines
- quieter running



INSOCOAT bearings

SKF provides electrically insulated bearings, called INSOCOAT. INSOCOAT bearings are designed to prevent current from passing through the bearing. The bearings are a very cost-effective solution compared with other insulation methods. By integrating the insulating properties into the bearing, INSOCOAT bearings can improve reliability and increase machine uptime by virtually eliminating the problem of electrical erosion.

INSOCOAT bearings are typically:

- single row deep groove ball bearings
- single row cylindrical roller bearings

Outer ring coating can be applied to bearings with an outside diameter > 80 mm. Inner ring coating can be applied to bearings with a bore diameter > 70 mm.

Design features

An INSOCOAT bearing is a standard bearing that has the outside surfaces of the inner ring (bore and side faces - identified by the designation suffix VL2071), or outer ring (outside diameter and side faces – identified by the designation suffix VL0241), plasma-sprayed with an aluminium-oxide to form a coating. The coating is sealed with a resin to protect against the conductive effects of water and moisture.

The basic coating can withstand voltages up to 1 000 V DC. However, coating variants withstanding higher voltages can be supplied on request (→ **table 4**).

SKF performs 100 % testing at a voltage of 1 000 V DC. Lab tests show that electrical breakdown occurs above 3 000 V DC. INSOCOAT bearings have a minimum ohmic resistance of 50 MΩ.

Mounting and maintenance

INSOCOAT bearings should be handled in the same way as standard bearings in terms of mounting, fits, lubrication and maintenance.

When using an induction heater, the INSOCOAT layer must not be damaged by the vibration of the heater. For bearings with a coated inner ring (designation suffix VL2071), use a protective sleeve or an additional support block made of plastic. In cases where springs are used to apply preload or lock nuts are used for axial clamping, SKF recommends inserting a steel spacer ring between the bearing and the preload or locking device (→ **fig. 5**).

Fig. 5.

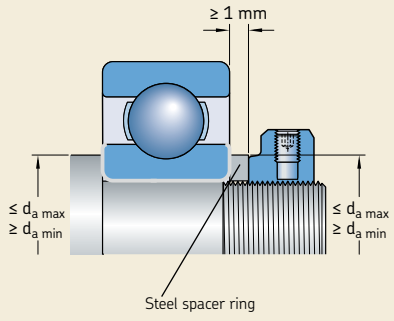

Table 4

INSOCOAT specifications

SKF specification designation suffix		No electrical breakdown up to operating voltage	Electrical resistance
		[V] DC	min. [MΩ]
Outer ring coated	**Inner ring coated**		
VL0241	VL2071	1 000	50
VL0244	VL2074	2 000	150
VL0246	VL2076	3 000	150



Hybrid bearings

Hybrid bearings provide a further improvement in the electrical insulation properties, especially for applications that use a high frequency converter.

Design features

Hybrid bearings have rings made of bearing steel and rolling elements made of bearing grade silicon nitride (Si_3N_4). Because the silicon nitride ceramic material is such an excellent electrical insulator, hybrid bearings can be used to effectively insulate the housing from the shaft in both AC and DC motors as well as in generators (→ **chapter 7**, *Electrical erosion* starting on **page 116**).

In addition to being an excellent insulator, hybrid bearings have higher speed capabilities and provide longer bearing service life under the same operating conditions than same-sized all-steel bearings. Hybrid bearings also perform extremely well under vibrating or oscillating conditions.

The types of SKF hybrid bearings mainly used in electric motors and generators include:

- single row deep groove ball bearings
- single row cylindrical roller bearings

Bearing performance is not only determined by load or speed ratings. There are a number of other factors that contribute to bearing performance. Main factors that enhance SKF hybrid bearing performance, when compared to a same-sized all-steel bearing, include:

- **Insulating properties**
  The non-conductive silicon nitride rolling elements protect the bearing from electric current passage and, therefore, can increase bearing service life in those applications where otherwise damaging electrical currents shorten bearing service life.
- **Lower density**
  The density of a bearing grade silicon nitride rolling element is 60% lower than a same sized rolling element made of bearing steel. Lower weight means lower inertia – and that translates into superior performance during rapid starts and stops, as well as higher speed capabilities.

- **Lower friction**
  The lower density of a silicon nitride rolling element, combined with its low coefficient of friction, significantly reduces bearing temperature at high speeds. Cooler running increases the service life of both the bearing and the lubricant.
- **High hardness and high modulus of elasticity**
  The high degree of hardness of a silicon nitride rolling element means high wear-resistance, increased bearing stiffness and longer bearing service life in contaminated environments.

Design benefits

Resistance to false brinelling

If a stationary bearing is subjected to vibrations, there is a risk that false brinelling will occur. False brinelling is the formation of shallow depressions in the raceways that will eventually lead to spalling and premature bearing failure. In cases where steel rolling elements were replaced by ceramic rolling elements, the bearings were found to be significantly less susceptible to false brinelling.

Reduced risk of smearing between silicon nitride and steel surfaces

Even under inadequate lubrication conditions, there is reduced risk of smearing between silicon nitride and steel surfaces. This enables hybrid bearings to operate much longer in applications where there are high speeds and fast accelerations, or applications where there is an insufficient hydrodynamic oil film (i.e. $\kappa < 1$). For hybrid bearings, it is common to apply $\kappa = 1$ for bearing life calculations for conditions where $\kappa < 1$.

Runs faster, lasts longer

Combine the lower density of silicon nitride with its lower coefficient of friction, high hardness and the fact that silicon nitride does not smear the raceways under poor lubrication conditions, and the result is a bearing that will run faster and longer even under the most difficult operating conditions.

Low coefficient of thermal expansion

A silicon nitride rolling element has a lower coefficient of thermal expansion than a same-sized rolling element made of bearing steel. This means less sensitivity to temperature gradients within the bearing and more accurate preload/clearance control.

Speed capability

Typically, hybrid bearings have a higher speed capability than same-sized all-steel bearings, however, in some cases, the cage execution may limit the permissible speed.

Improved grease life

Hybrid bearings generate less frictional heat than same sized all-steel bearings, especially at high speeds. Lower bearing operating temperatures have a beneficial effect on bearing life and relubrication intervals. Depending on the application and operating conditions, the grease can last at least 2 times longer.

Resistance to wear caused by solid particle contaminants

When steel rolling elements overroll solid contaminants, indentations that have raised edges, due to plastic deformation, form in the raceways and on the rolling elements. As the rolling elements continue to overroll the raised edges, the local higher stresses will lead to spalling, which eventually lead to premature bearing failure.

Hybrid bearings, however, react to overrolling the damaged area differently. Because silicon nitride is so hard, the raised edges of the indentation are flattened with each passing rolling element until the raceway is smooth again. This reduces the local stresses and the chance that spalling will occur, which can significantly extend the service life of the bearing.

For more information please contact your local SKF representative or the SKF application engineering service.



Angular contact ball bearings

Angular contact ball bearings are used primarily as locating bearings in vertical electric motors when heavy axial loads cannot be accommodated by deep groove ball bearings. Available in either a single or double row design, angular contact ball bearings have a high axial load carrying capacity as well as high speed capability. For very high speed applications, single row angular contact ball bearings are also available with ceramic balls as hybrid bearings (suffix HC5).

A double row angular contact ball bearing or a pair of universally matchable single row angular contact ball bearings can also accommodate heavier radial loads than single row angular contact ball bearings.

Single row angular contact ball bearings

Depending on the bearing series and size, SKF single row angular contact ball bearings are fitted as standard with one of the following cages:

- an injection moulded window-type cage of glass fibre reinforced polyamide 66, ball centred (designation suffix P)
- an injection moulded window-type cage of glass fibre reinforced polyetheretherketone (PEEK), ball centred (designation suffix PH)
- a pressed window-type brass cage, ball centred (designation suffix Y)
- a machined window-type brass cage, ball centred (designation suffix M)

For most popular sizes, SKF manufactures as standard, universally matchable bearings, which provide a very controlled clearance or preload when the bearings are mounted back-to-back or face-to-face (→ *SKF Rolling Bearings Catalogue* – for clearance, **table 5**, **page 488**; and preload **table 6**, **page 489**).

Sealed SKF single row angular contact ball bearings

A range of sealed and greased for life single row angular contact ball bearings is equipped with RZ non-contact seals. On request, executions with RS contact seals are available. RZ non-contact seals generate less friction and frictional heat than RS contact seals. This usually results in longer grease service life and reduced grease leakage.

For reference cases – or detailed information, contact your local SKF representative.

Super-precision single row angular contact ball bearings

These bearings, which are manufactured to different designs and high-precision classes, are available with cotton fabric reinforced phenolic resin or glass fibre reinforced polyetheretherketone (PEEK) cage, and either steel or ceramic balls. There is a choice of several contact angles and preload levels and sealed bearings are also available. These bearings are typically used in high-speed applications, such as spindle motors.

For additional information, go to skf.com/bearings or contact your local SKF representative.

Double row angular contact ball bearings

With or without seals or shields, double row angular contact ball bearings are produced to both Normal and C3 internal axial clearance. Depending on the bearing series and size, SKF double row angular contact ball bearings are fitted as standard with two of each of the following cages:

- an injection moulded snap-type cage of glass fibre reinforced polyamide 66, ball centred (designation suffix TN9)
- a pressed snap-type steel crown cage, ball centred (no designation suffix or designation suffix J1)

SKF Explorer angular contact ball bearings – designed to run faster, cooler, smoother, longer

The premium performance class SKF Explorer bearings combine material and design innovations that can increase bearing life up to three times longer.

They are characterized by:

- extremely clean steel and unique heat treatment process
- high load and speed ratings
- high level of running accuracy
- low friction, vibration and noise levels

SKF Explorer angular contact ball bearings are not an extension of the assortment. They replace final variants of the previous types.

SKF Energy Efficient (E2) double row angular contact ball bearings

Angular contact ball bearings within this performance class are characterized by a frictional moment in the bearing that is at least 30% lower when compared to a same-sized standard SKF bearing. Due to the reduction of the frictional moment, SKF E2 double row angular contact ball bearings run up to 30 °C (*54 °F*) cooler than standard bearings. This extends grease life and potentially bearing service life. The bearings achieved the substantial reduction of the frictional moment by optimizing the internal geometry of the bearing and applying a new, low-friction grease. SKF E2 double row angular contact ball bearings are available in the 32 and 33 dimension series (→ *SKF Rolling Bearings Catalogue*, **matrix 2**, **page 501**). The bearings are equipped with a shield on both sides and lubricated for the life of the bearing. They are interchangeable with SKF Explorer double row angular contact ball bearings regarding main dimensions, load and speed ratings.





Spherical roller bearings

Spherical roller bearings are commonly used in large, oil lubricated electric motors and generators (→ **chapter 8**, *Large and very large electric machines* on **page 131**). Spherical roller bearings are also found in large motors and generators that use plummer block housings.

Features and benefits

SKF spherical roller bearings have a very high load-carrying capacity. They incorporate special features such as self-guiding rollers (exclusively in SKF spherical roller bearings, realized a.o. via a floating guide ring which guides unloaded rollers so that they enter the load zone in the optimal position) that enable the bearings to generate less heat during operation. The bearings are self-aligning and consequently insensitive to misalignment. SKF spherical roller bearings are available with either a cylindrical or tapered bore and can be mounted in standard housings as well as special housings designed for large motors and generators (→ **chapter 8**, *SKF flanged housing units with rolling bearings* on **page 131**).

SKF also has a standard assortment of sealed spherical roller bearings that can significantly simplify the sealing arrangement in the electric machine.

Internal clearance

Spherical roller bearings can accommodate heavier loads than ball bearings. Therefore, they require tighter shaft fits and have higher initial internal clearance values. To compensate for the resulting clearance reduction after mounting, Normal clearance (CN) is usually preferred over C3 for spherical roller bearings used in electric machines, unless there are special shaft and housing fit requirements. With a Normal clearance and a normal fit, the extent of the loaded zone should be appropriate to reduce noise and the risk of smearing.

SKF Explorer spherical roller bearings

In response to the ever-demanding performance requirements of modern machinery, SKF developed the SKF Explorer performance class of rolling bearings. SKF Explorer spherical roller bearings realized this substantial improvement in performance by optimizing the internal geometry and surface finish of all contact surfaces, combining the extremely clean and homogenous steel with a unique heat treatment, improving the cage, roller profile and the geometry of the raceways. These improvements provide the following benefits:

- higher dynamic load carrying capacity compared to conventional design bearings
- improved wear-resistance
- reduced noise and vibration levels
- less frictional heat
- significantly longer bearing life

SKF is continuously working to improve the performance and durability of the SKF Explorer bearings. The latest upgrade involves upgraded steel treatment providing even better wear resistance. This feature is especially favourable under tough operating conditions with contamination or poor lubrication.

SKF Energy Efficient (E2) bearings

To meet the ever-increasing demand to reduce friction and energy use, SKF has developed the SKF Energy Efficient (E2) performance class of rolling bearings. Spherical roller bearings within this performance class are characterized by a frictional moment in the bearing that is at least 30% lower when compared to a same-sized SKF Explorer bearing. Reduced operating temperatures improve lubrication conditions and enable extended lubrication intervals or higher speeds. The enhanced performance characteristics require the following conditions:

- speed above the recommended minimum speed of 500 r/min
- operating temperature ≤ 110 °C *(230 °F)*
- load P ≤ 0,067 C
- lubrication and relubrication with SKF LESA 2 grease only (→ *SKF Rolling Bearings Catalogue*, **table 2**, **page 889**)

For loads P > 0,067 C, SKF Explorer bearings are more beneficial.



CARB toroidal roller bearings

The CARB toroidal roller bearing can support very heavy radial loads. It is intended exclusively as a non-locating bearing and as such is an excellent choice with its combination of self-aligning and axial alignment properties. The rollers of the CARB toroidal roller bearing are self-guiding and will always adopt the position where the load is evenly distributed over the roller length – irrespective of whether the inner ring is axially displaced and/or misaligned relative to the outer ring. The CARB toroidal roller bearing adapts to both angular misalignment and axial displacement simultaneously. These excellent features mean that CARB toroidal roller bearings can extend service life, increase uptime and reduce maintenance costs where conventional bearings might experience premature failure.

Features and benefits

CARB toroidal roller bearings are used in small, medium and large electric motors and generators as the non-locating bearing to accommodate axial expansion of the shaft. In belt and geared motors, the CARB toroidal roller bearing also accommodates heavy radial loads. The CARB toroidal roller bearing is unique in its design as it can accommodate axial elongation of the shaft internally like a cylindrical roller bearing and misalignment like a spherical roller bearing. In addition, the CARB toroidal roller bearing has high load carrying capability, low friction and it can also have the compact cross section normally associated with needle roller bearings. The unique roller design makes the CARB toroidal roller bearing less sensitive to skidding under light loads, making it possible for this bearing to be used in coupled motors with relatively light loads.

Misalignment and axial displacement

CARB toroidal roller bearings can accommodate up to 0,5 degrees of misalignment without affecting bearing performance. Axial displacement capability is a function of the radial clearance in the bearing and the misalignment between the inner ring and outer ring.

Internal clearance

The internal radial clearance of a CARB toroidal roller bearing is greater than the clearance levels for comparable spherical roller bearings and cylindrical roller bearings having the same clearance class. This is because the axial displacement of one ring in relation to the other will reduce the radial clearance in CARB toroidal roller bearings. Since the levels are higher than those corresponding to other rolling bearings, the preferred clearance level for CARB toroidal roller bearings in electric motors and generators is Normal clearance.

CARB toroidal roller bearings in SKF Explorer performance class

All CARB toroidal roller bearings are manufactured to the SKF Explorer performance class.

In response to the ever-demanding performance requirements of modern machinery, SKF developed the SKF Explorer performance class of rolling bearings. CARB toroidal roller bearings in SKF Explorer performance class realized this substantial improvement in performance by optimizing the internal geometry and surface finish of all contact surfaces, combining the extremely clean and homogenous steel with a unique heat treatment, improving the cage, roller profile and the geometry of the raceways. These improvements provide the following benefits:

- higher dynamic load carrying capacity compared to conventional design bearings
- improved wear-resistance
- reduced noise and vibration levels
- less frictional heat
- significantly longer bearing life

SKF is continuously working to improve the performance and durability of the SKF Explorer bearings. The latest upgrade involves upgraded steel treatment providing even better wear resistance. This feature is especially favourable under tough operating conditions with contamination or poor lubrication.



Spherical roller thrust bearings

Spherical roller thrust bearings have the highest carrying capacity of all thrust roller bearings. In addition to very heavy thrust loads, they can also accommodate heavy simultaneously acting radial loads. This, together with the inherent self-aligning feature, makes them the natural choice for electrical machines subjected to heavy thrust loads. A good example is vertical power turbines.

Spherical roller thrust bearings can also be used as a replacement for hydrostatic or hydrodynamic bearings.

Features and benefits

The main features of spherical roller thrust bearings is their ability to accommodate very heavy thrust loads, simultaneously acting heavy radial loads, misalignment and relatively high speeds.

Furthermore, spherical roller thrust bearings are separable, i.e. the shaft washer with the cage and roller assembly can be mounted separately from the housing washer, which simplifies mounting.

The ability to maximize the effects of an oil bath by creating an internal pumping action makes spherical roller thrust bearings a very cost-effective choice when compared to hydrostatic bearings that require an oil pressure system. Grease lubrication is also possible in moderate speed applications.

Due to the self-aligning capability, spherical roller thrust bearings accommodate misalignment of the shaft relative to the housing and shaft deflections or bending.

SKF Explorer spherical roller thrust bearings

In response to the ever-demanding performance requirements of modern machinery, SKF developed the SKF Explorer performance class of rolling bearings. SKF Explorer spherical roller thrust bearings realized this substantial improvement in performance by optimizing the internal geometry and surface finish of all contact surfaces, combining the extremely clean and homogenous steel with a unique heat treatment, improving the cage, roller profile and the geometry of the raceways. These improvements provide the following benefits:

- higher dynamic load carrying capacity compared to conventional design bearings
- improved wear-resistance
- reduced noise and vibration levels
- less frictional heat
- significantly longer bearing life

SKF is continuously working to improve the performance and durability of the SKF Explorer bearings. The latest upgrade involves upgraded steel treatment providing even better wear resistance. This feature is especially favourable under tough operating conditions with contamination or poor lubrication.

2 Bearing systems

Selecting a bearing system **39**

Preloading with springs **49**

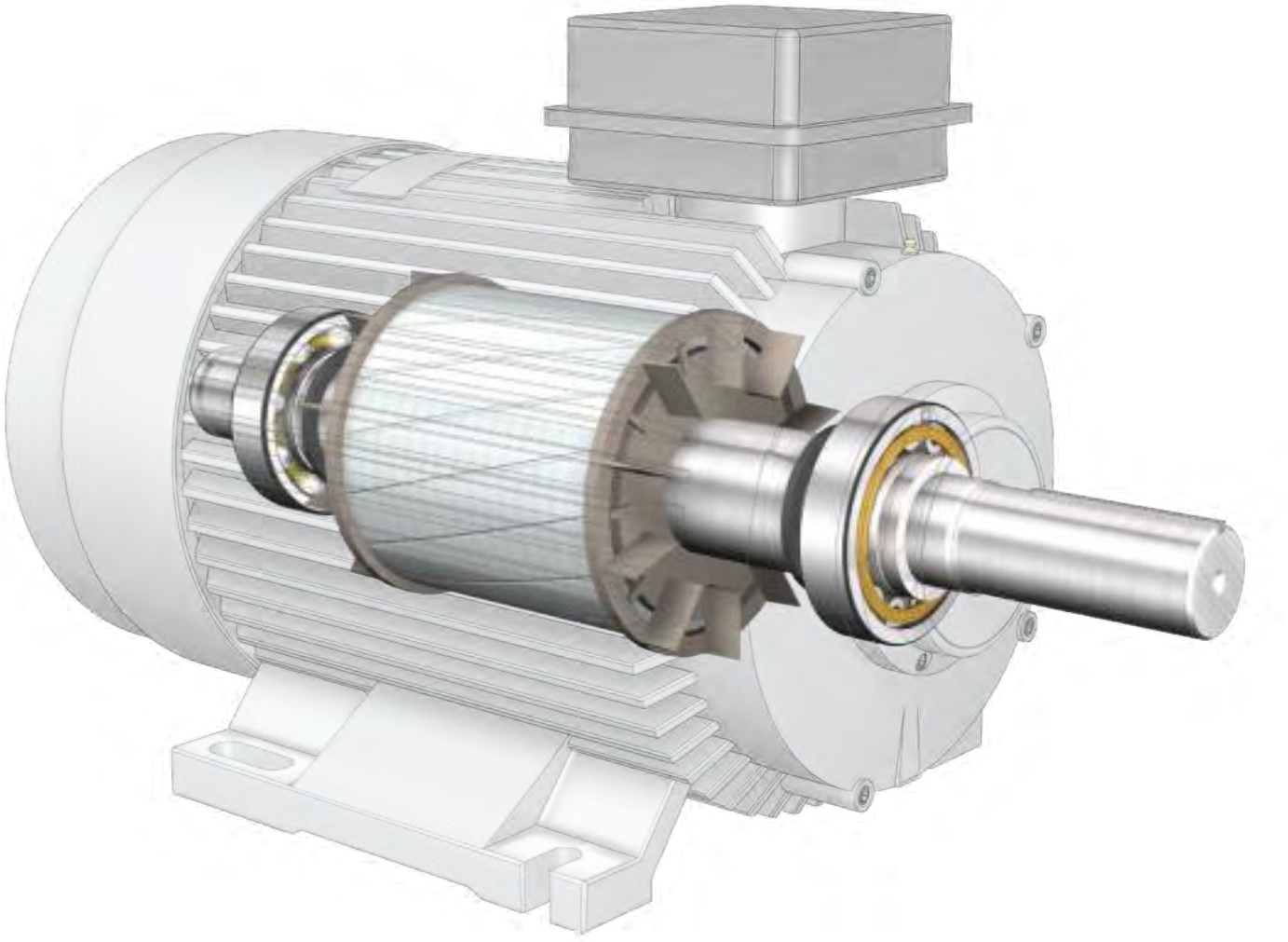

Bearing systems

Bearings in electric motors and generators must support the rotor radially and locate it axially in relation to the stator. The typical bearing system consists of a locating and a non-locating bearing. In most medium and large motors and generators, the locating bearing is a deep groove ball bearing, while the non-locating bearing can be a deep groove ball bearing, an N or NU design cylindrical roller bearing or a CARB toroidal roller bearing.

Smaller motors, fitted with two deep groove ball bearings mounted on a short shaft, often have a cross-locating bearing system.

Selecting a bearing system

Most motors are designed with a locating/non-locating bearing system. The locating bearing positions the shaft axially. The non-locating bearing is designed to accommodate thermal elongation of the shaft to avoid induced axial loads.

For the locating bearing position, radial bearings that can accommodate combined (radial and axial) loads are used. These include deep groove ball bearings, matched single row angular contact ball bearings, double row angular contact ball bearings and spherical roller bearings.

There are two ways to accommodate thermal displacements of the shaft at the non-locating bearing position. The first is to use a bearing that only accommodates radial loads and enables axial displacement within the bearing. These include CARB toroidal roller bearings and those cylindrical roller bearings that have one ring without flanges (→ **fig. 6**, **page 43**). The other method is to use a radial bearing mounted with a loose fit in the housing (→ **fig. 2**, **page 41**) so that the outer ring is free to move axially.

Different application requirements need to be considered when designing an electric motor's bearing system such as service life, noise levels and maintenance. Sometimes, the requirements are such that a compromise may be necessary. For example, if an application has high operating temperatures, it may not be possible to use greased-for-life bearings that have seals or shields. Instead, relubrication features may be necessary.

System for coupled drives

Small motors

Small motors with short shafts generally use a cross locating system with two deep groove ball bearings. The shaft is located axially in one direction by one bearing and in the opposite direction by the other bearing (→ **fig. 1**). Thermal elongation of the shaft in the shown application is accomodated by the axial clearance of the bearing system.

If the shaft is too long for a cross locating system, a locating/non-locating system with two deep groove balls bearings is typically used.

To meet low noise requirements, deep groove ball bearing arrangements are usually axially preloaded with a spring, see **fig. 2** on **page 41**, bearing on the right, and **fig. 17** on **page 49**. The axial load from the spring provides the minimum load requirements for the bearings (→ *Preloading with springs*, **page 49**). The spring load also centers and guides the rotor to reduce vibration and noise for a quieter running motor.

The typical small motor housing uses a gap type seal. For additional protection, the bearings are equipped with shields and are greased for life. This type of sealing solution is suitable for dry, clean environments.

For more contaminated environments, a low friction seal is recommended.

Medium to large motors

The typical bearing system in a medium or large motor uses two deep groove ball bearings where the bearing on the drive end (DE) is the locating bearing and the bearing on the non-drive end (NDE) is the non-locating bearing. The outer ring of the bearing in the non-locating position must be able to move axially to accommodate thermal elongation of the shaft. This requires a loose fit in the housing.

Medium and large electric motors are usually equipped with open bearings that require relubrication. If the bearings need frequent relubrication, the motor should be equipped with a grease escape valve (→ **fig. 3**, **chapter 5**, **page 84**). Excess grease is collected by a rotating disc, discharged into a cavity in the end-cover by centrifugal force, and ejected through an opening on the underside of the cover.

A typical sealing solution for the bearing system is a labyrinth seal at the drive end and a low friction contact seal (for example a V-ring) on the non-drive end (NDE). To prevent grease from leaking into the rotor area, felt seals can be mounted in the inner covers.

Fig. 1.

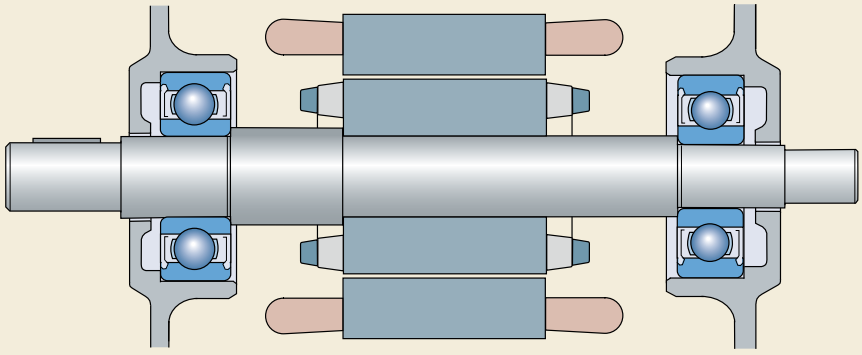

Cross locating bearing system for small motors

Systems for belt drives

Small motors

Small motors, up to an IEC frame size of 132, are usually equipped with two deep groove ball bearings (→ *Systems for coupled drives – Small motors*, **page 40**).

Medium to large motors

Electric motors intended for belt drives can use an N or NU cylindrical roller bearing or a CARB bearing as the non-locating bearing on the drive end (DE) to accomodate radial loads generated by the belt tension. Because these bearings accommodate thermal elongation of the shaft relative to the housing within the bearing, their rings must be located axially on the shaft and in the housing.

Note that an interference fit alone is not sufficient to secure a bearing ring axially.

Medium-sized three phase electric motor with relubrication features and grease escape valves

Fig. 2

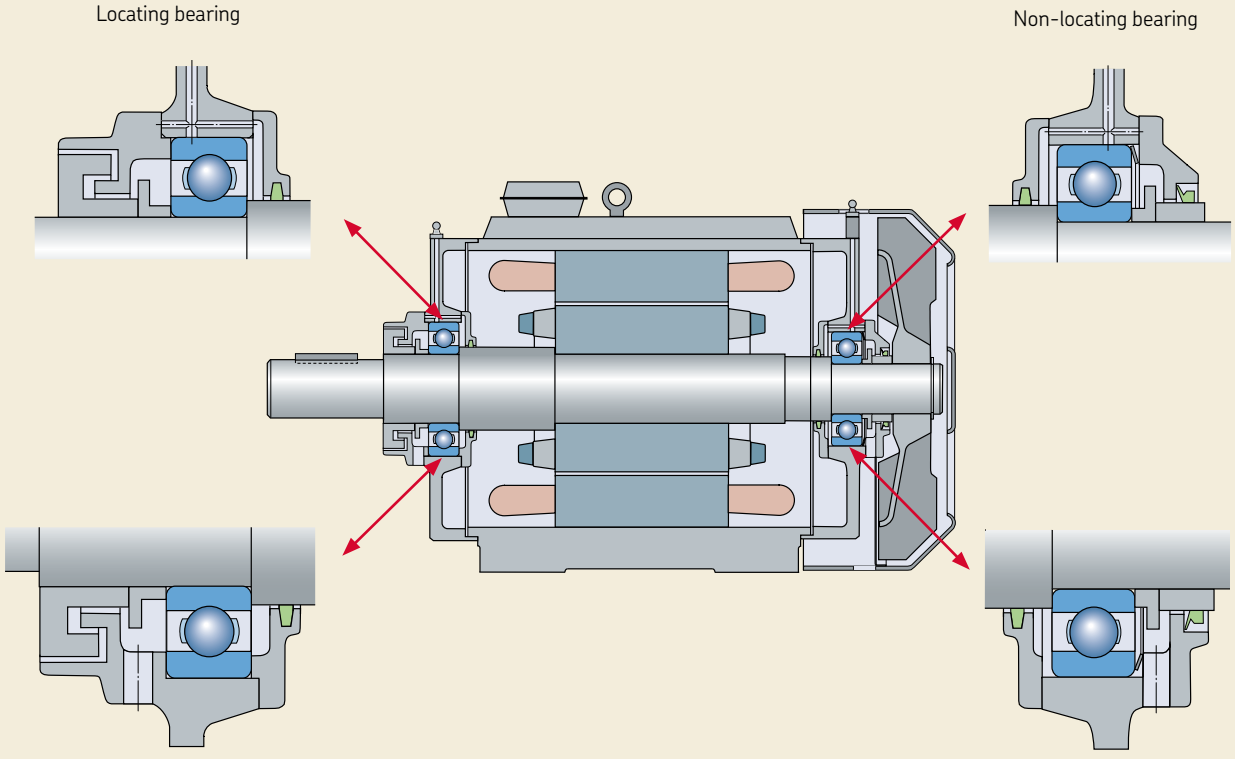

Aluminium housings

The coefficient of thermal expansion for aluminium is more than two times greater than for cast iron or steel. At normal operating temperature, depending on the load conditions and the selected fits, the bearing outer ring may creep in its seat in the housing. The result: wear and damage to the bearing seat. To prevent outer ring creep, cut an O-ring groove in the bearing seat in the housing and install a rubber O-ring. When designed correctly, the O-ring will apply enough pressure to the outer ring to prevent it from spinning in the housing bore (→ **fig. 3**).

Design guidelines for O-ring grooves

To prevent the bearing from shearing the O-ring during installation, the O-ring groove needs to be sufficiently recessed. **Fig. 4** provides guidelines for dimensioning. The groove should be designed according to the standard values for static application of O-rings and be positioned off-centre relative to the bearing.

The hardness of the O-ring should be approximately 70° shore A.

Examples of typical bearing arrangements

Typical bearing arrangements used in industrial electric motors and generators are shown on **pages 43** to **48**.

System with aluminium housings equipped with O-rings to prevent outer ring creep

Fig. 3

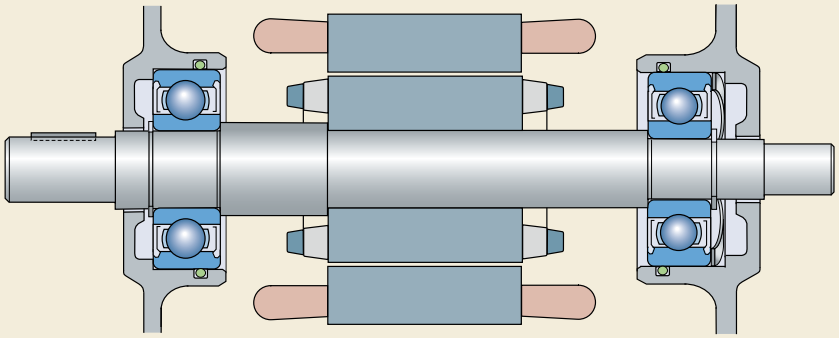

Guidelines for O-ring groove dimensions

Fig. 4

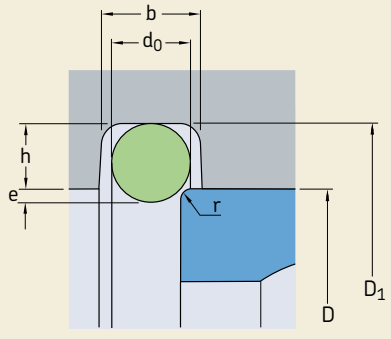

$e = 0{,}2\ d_0 < r$
$h = 0{,}8\ d_0$
$D_1 = D + 2\ h$
$b = 1{,}4\ d_0$

Fig. 5

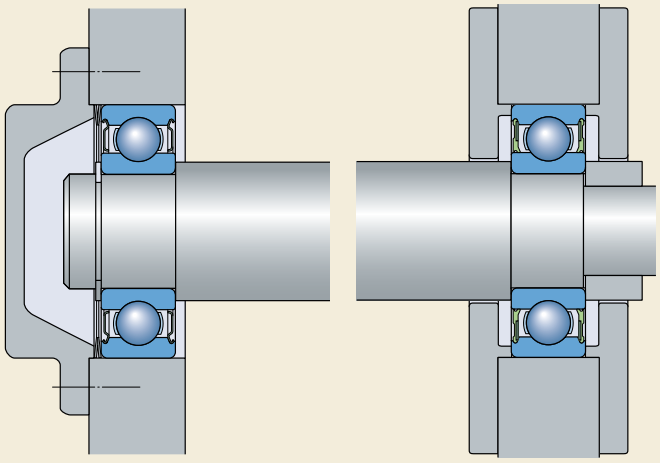

Shielded deep groove ball bearing + sealed deep groove ball bearing

Fig. 6

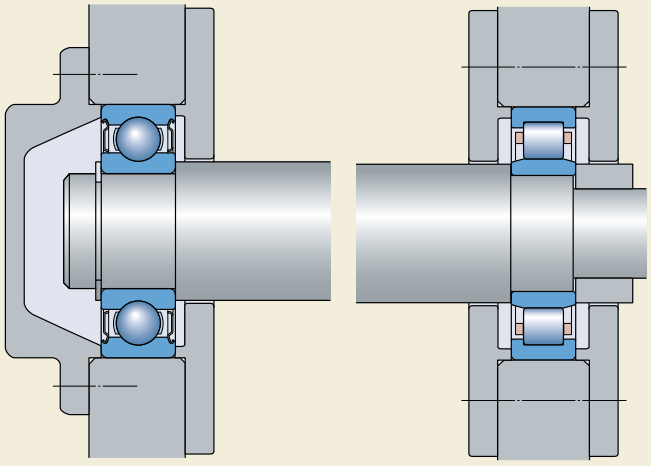

Shielded deep groove ball bearing + cylindrical roller bearing

Table 1a

Type of bearing arrangement	Requirements Noise	Speed	Maintenance	Guidance Radial	Axial	Loads Radial	Axial	Remarks
Horizontal layout								
Capped deep groove ball bearing + capped deep groove ball bearing (→ **fig. 5**)								For small and medium size electric motors. Low maintenance. Axial guidance is not a key parameter. The non-locating bearing is spring preloaded.
– shielded and low friction seals	5	5	5	5	3	3	3	
– contact seals	5	4	5	5	3	3	3	
Capped deep groove ball bearing + cylindrical roller bearing (→ **fig.6**)	3	4	3	3	3	5	3	For medium and large size electric motors, with heavy radial loads on the drive side. Accommodates thermal elongation of the shaft relative to the housing within the bearing.

5 = Excellent 4 = Very good 3 = Good 2 = Fair 1 = Not recommended

Cylindrical roller bearing + two universally matchable angular contact ball bearings mounted face-to-face

Fig. 7

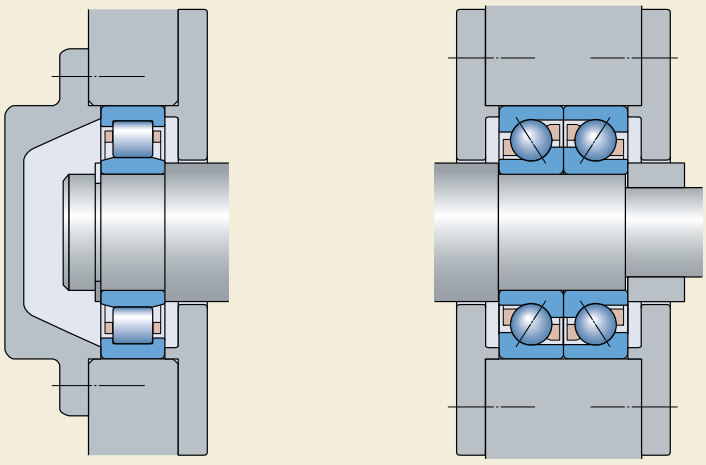

Deep groove ball bearing + two universally matchable angular contact ball bearings mounted face-to-face

Fig. 8

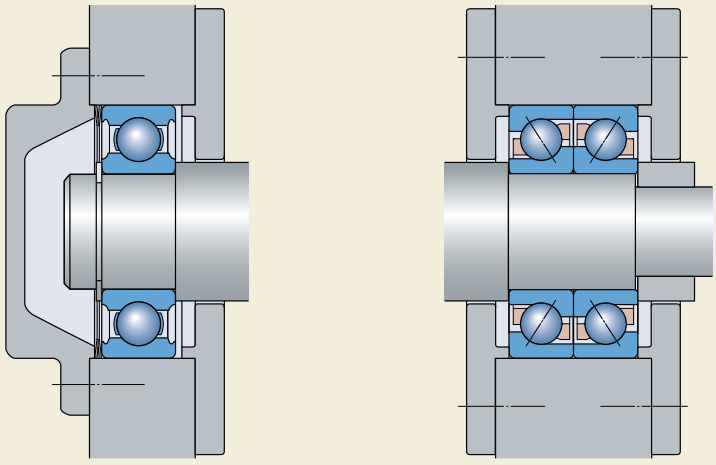

Table 1b

Type of bearing arrangement	Requirements			Guidance		Loads		Remarks
	Noise	Speed	Maintenance	Radial	Axial	Radial	Axial	
Horizontal layout								
Cylindrical roller bearing + two universally matchable angular contact ball bearings mounted face-to-face (→ **fig. 7**)	3	4	3	5	5	5	5	Electric motors with axial loads acting in both directions and heavy radial loads, or when axial guidance is important.
Deep groove ball bearing + two universally matchable angular contact ball bearings mounted face-to-face (→ **fig. 8**)	5	4	4	5	5	5	5	Small electric motors with axial loads acting in both directions and moderate radial loads or when axial guidance is important. The bearing in the non-locating position is spring preloaded.

5 = Excellent 4 = Very good 3 = Good 2 = Fair 1 = Not recommended

Fig. 9

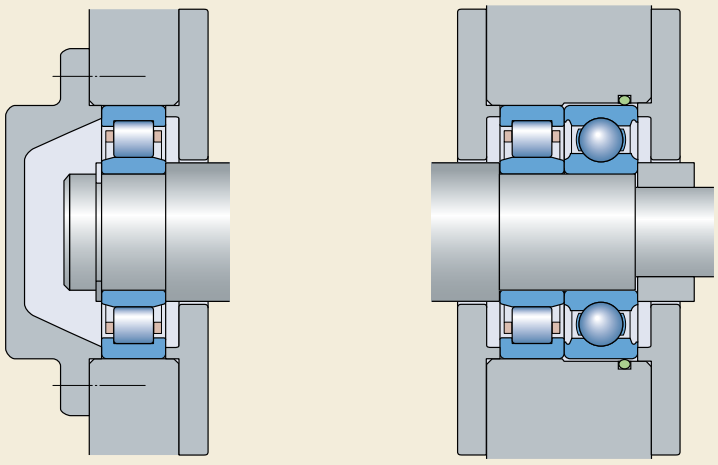

Cylindrical roller bearing + cylindrical roller bearing and radially free mounted deep groove ball bearing

Fig. 10

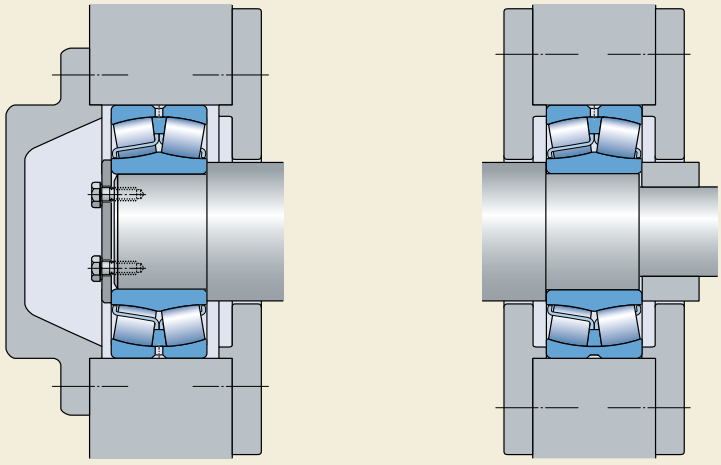

Spherical roller bearing + spherical roller bearing

Table 1c

Type of bearing arrangement	Requirements Noise	Speed	Maintenance	Guidance Radial	Axial	Loads Radial	Axial	Remarks
Horizontal layout								
Cylindrical roller bearing + cylindrical roller bearing and deep groove ball bearing (→ **fig. 9**)	3	4	3	3	3	5	3	For large electric machines. The deep groove ball bearing solely carries the axial loads and locates the shaft in axial direction. It is radially free and uses an O-ring to prevent outer ring creep.
Spherical roller bearing + spherical roller bearing (→ **fig. 10**)	3	3	3	3	3	5	4	For very large electric machines and very heavy loads.

5 = Excellent 4 = Very good 3 = Good 2 = Fair 1 = Not recommended

Spherical roller bearing + CARB toroidal roller bearing

Fig. 11

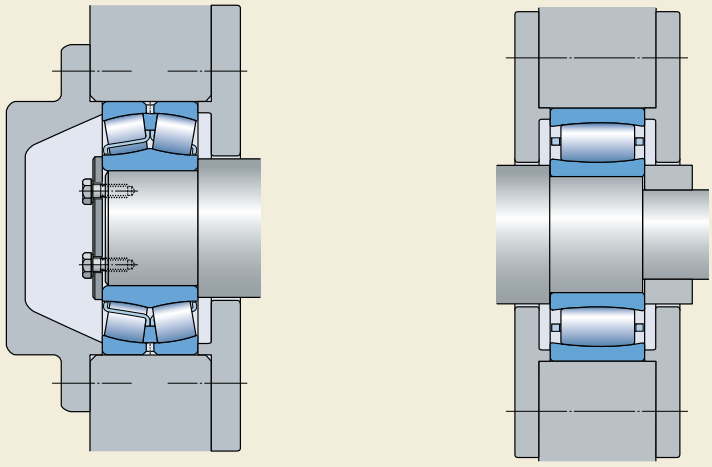

Sealed deep groove ball bearing + sealed deep groove ball bearing

Fig. 12

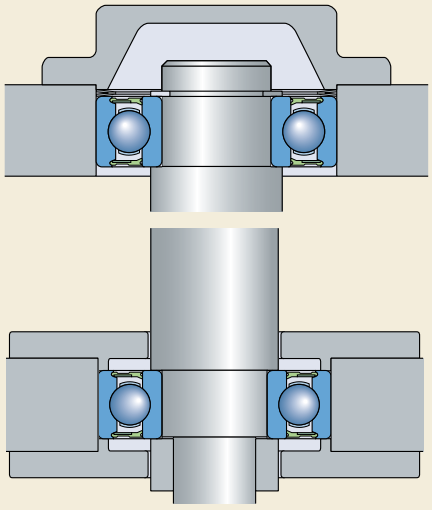

Table 1d

Type of bearing arrangement	Requirements Noise	Speed	Maintenance	Guidance Radial	Axial	Loads Radial	Axial	Remarks
Horizontal layout								
Spherical roller bearing + CARB toroidal roller bearing (→ **fig. 11**)	3	3	3	3	3	5	4	For very large electric machines and very heavy loads. CARB toroidal roller bearing used in the non-locating position to accommodate thermal elongation of the shaft within the bearing.
Vertical layout								
Sealed deep groove ball bearing + sealed deep groove ball bearing (→ **fig. 12**)								Standard arrangement for small and medium electric motors. Light axial loads in both directions. Upper non-locating bearing is spring loaded.
– low friction seals	5	5	5	5	3	3	2	
– contact seals	5	4	5	5	3	3	2	

5 = Excellent 4 = Very good 3 = Good 2 = Fair 1 = Not recommended

Fig. 13

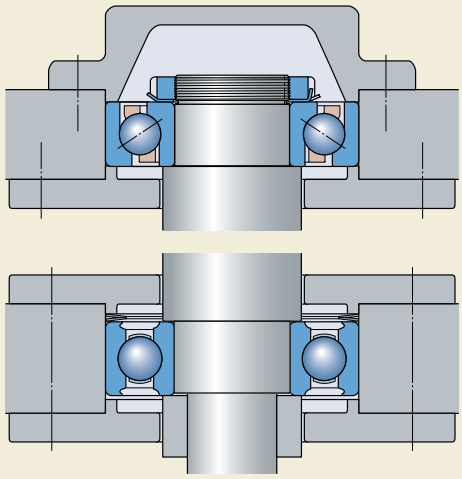

Angular contact ball bearing + deep groove ball bearing

Fig. 14

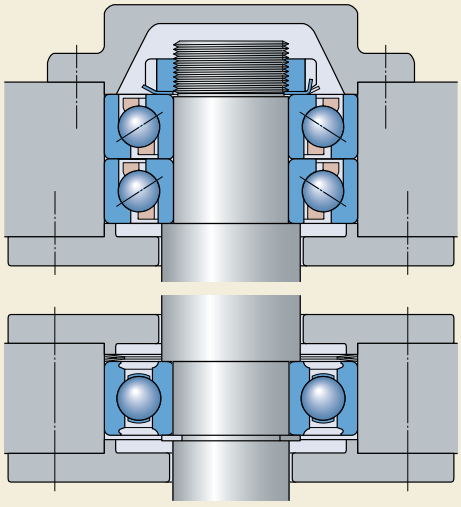

Two universally matchable angular contact ball bearings in tandem arrangement + deep groove ball bearing

Table 1e

Type of bearing arrangement	Requirements Noise	Speed	Maintenance	Guidance Radial	Axial	Loads Radial	Axial	Remarks
Vertical layout								
Angular contact ball bearing + deep groove ball bearing (→ **fig. 13**)	5	4	5	5	5	3	4	Standard arrangement for larger electric motors with moderate axial loads in one direction (downwards). Non-locating bearing is spring preloaded.
Two universally matchable angular contact ball bearings in tandem arrangement + deep groove ball bearing (→ **fig. 14**)	5	3	4	5	5	3	5	Standard arrangement for larger electric motors with heavy axial loads in one direction (downwards). Non-locating bearing is spring preloaded.

5 = Excellent 4 = Very good 3 = Good 2 = Fair 1 = Not recommended

Two universally matchable angular contact ball bearings in face-to-face arrangement + deep groove ball bearing

Fig. 15

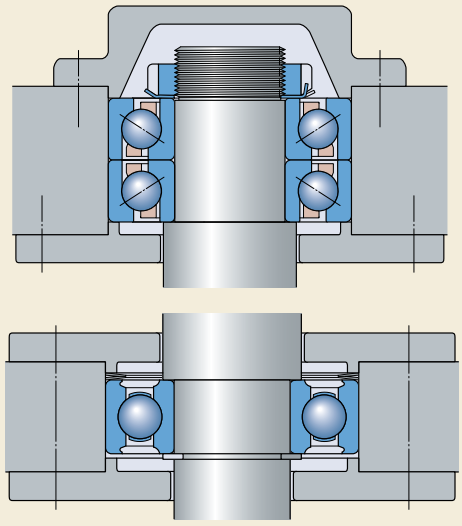

Cylindrical roller bearing + spherical roller thrust bearing

Fig. 16

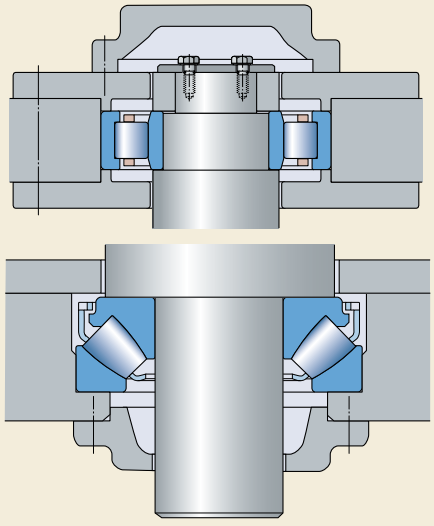

Table 1f

Type of bearing arrangement	Requirements			Guidance		Loads		Remarks
	Noise	Speed	Maintenance	Radial	Axial	Radial	Axial	
Vertical layout								
Two universally matchable angular contact ball bearings in face-to-face arrangement + deep groove ball bearing (→ **fig. 15**)	5	3	4	5	5	4	4	Standard arrangement for larger electric motors with moderate axial loads in both directions. Non-locating bearing is spring preloaded.
Cylindrical roller bearing + spherical roller thrust bearing (→ **fig. 16**)	3	3	4	3	3	5	5	For large vertical electric machines. Heavy downward axial load

5 = Excellent 4 = Very good 3 = Good 2 = Fair 1 = Not recommended

Preloading with springs

An easy way to axially preload a ball bearing is to use a spring washer or a set of helicoidal springs to apply pressure to the side face of the outer ring of the non-locating bearing (→ **fig. 17**). To do this, the outer ring must have a loose fit and be able to move axially in its seat. With springs the preload force remains fairly constant even when there is displacement of the shaft relative to the housing due to thermal elongation of the shaft.

For small electric machines (light rotor mass) equipped with deep groove ball bearings, the requisite preload force can be estimated from

$$F = k\,d$$

where
F = preload force [kN]
k = a factor (→ recommendations under *Quiet running*, **page 49**, and *Preventing false brinelling*, **page 50**)
d = bearing bore diameter [mm]

Quiet running

To reduce operating noise in an electric motor fitted with deep groove ball bearings, an axial preload should be applied to the outer ring of the non-locating bearing. This preload will result in an axial load distributed evenly to all the balls in both bearings to substantially reduce noise and vibration levels. To calculate the required preload, generally factor k values between 0,005 and 0,01 are considered appropriate. To adjust the value of the factor k more precisely, tests have to be performed to check the influence of component tolerances on noise levels.

Deep groove ball bearing system preloaded with a spring

Fig. 17

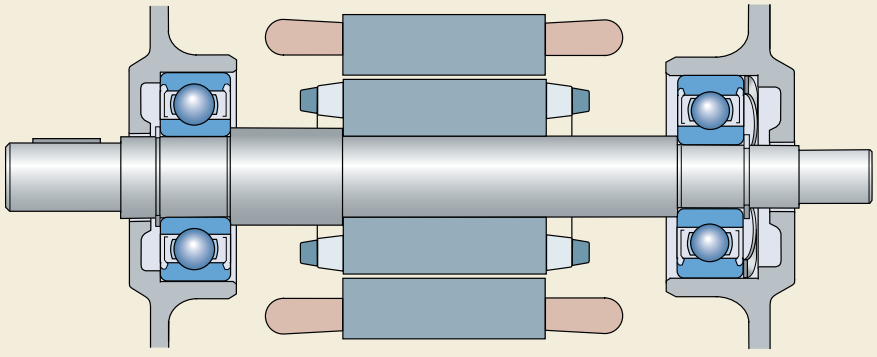

Preventing false brinelling

Damage from false brinelling can occur if bearings are subjected to vibrations in the application or during transport. This type of damage is described in **chapter 7**, starting on **page 109**.

Axial preloading with springs can substantially reduce the risk of false brinelling. If the bearings are spring loaded to reduce false brinelling and not to reduce noise, a factor k value of 0,02 should be used to calculate the requisite preload with the formula shown on **page 49**.

Minimum load

In order to provide satisfactory operation, ball and roller bearings must always be subjected to a minimum load, particularly if they are to operate at high speeds or are subjected to high accelerations or rapid changes in the direction of a load. Under such conditions, the inertial forces in the rolling elements and cage, and the friction generated by the lubricant, can have a detrimental influence on the rolling conditions in a bearing and may cause damaging sliding movements to occur between the rolling elements and raceways. The formula to calculate the requisite minimum load to be applied to different bearings types can be found in the relevant product sections in the *SKF Rolling Bearings Catalogue* or online via skf.com.

When starting up at low temperatures or when the lubricant is highly viscous, even higher minimum loads may be required. The weight of the components supported by the bearing, together with external loads, generally exceed the requisite minimum load. If this is not the case, the bearing must be subjected to an additional load.

For applications where deep groove ball bearings are used, this can be achieved by applying an axial preload using springs.

In cases where a rigid coupling is used and alignment is extremely accurate, the drive side bearing can become unloaded. In these cases, the load is accommodated by the non-drive bearing in the motor and the bearing supporting the coupled shaft. For these types of applications, SKF recommends using a spring loaded deep groove ball bearing in the non-locating position.

3 Seals in electric machines

Design requirements 54

Integral bearing seals. 55

Shaft seals 57

Special seals 62

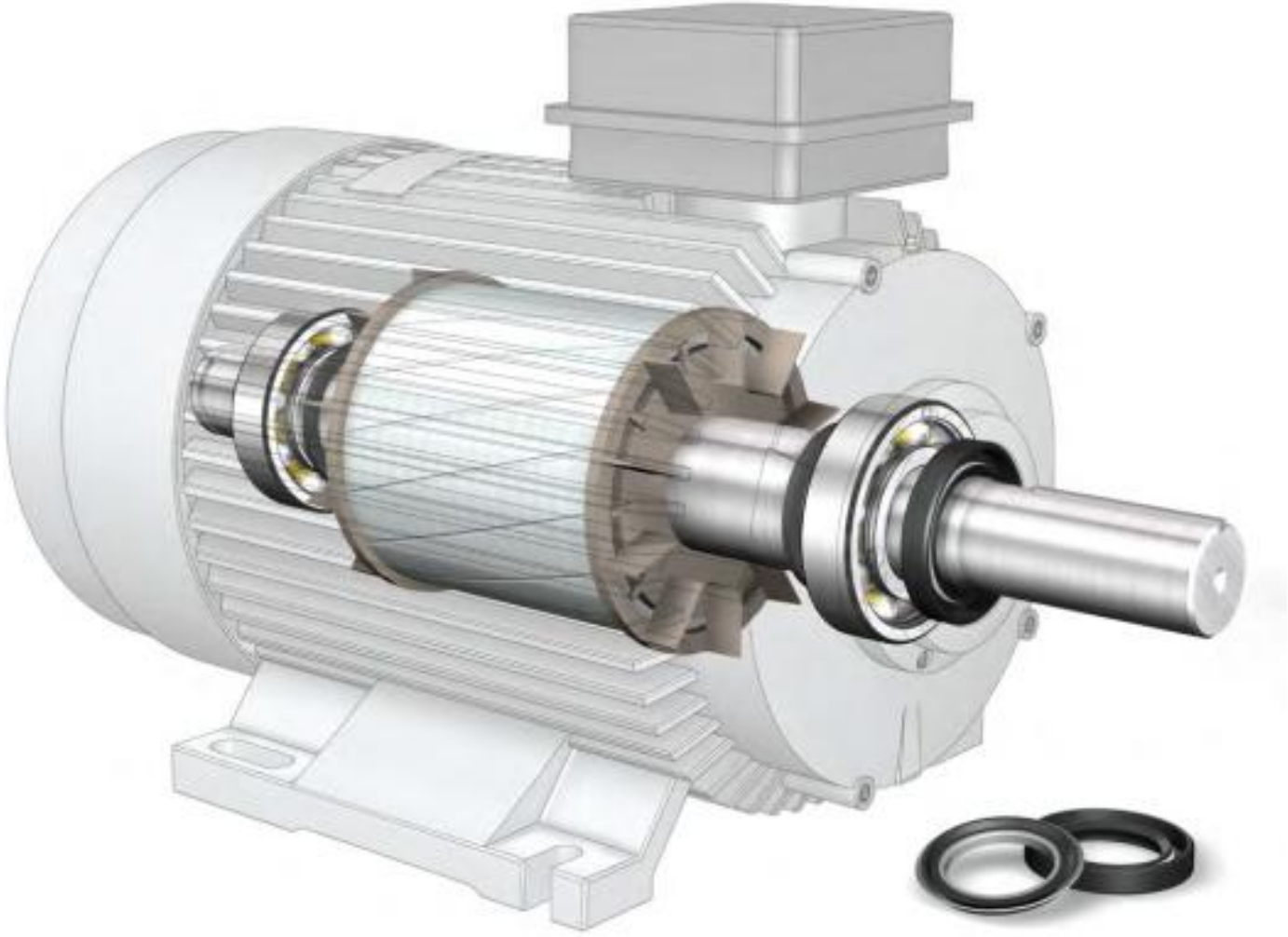

Seals in electric machines

The purpose of a sealing system in electric machines is to seal the gap between the rotor shaft and stator housing and protect the inside of the machine from a variety of contaminants while protecting the machine's external environment. Seals should provide maximum protection with a minimum amount of friction and wear, even under the most arduous operating conditions. The sealing system should enable high and low speeds, minimize friction and minimize power consumption. The sealing system can consist of external non-contact labyrinth seals and/or contact seals (e.g. radial shaft seals) and can be enhanced by using integral bearing seals.

The designer of the sealing system has to consider many different parameters when selecting the appropriate type of seals and their arrangement to meet the requirements of a particular motor application. The chosen design should always be the most economical from a total lifecycle perspective.

Design requirements

The design parameters for the sealing system of an electric machine can vary. Parameters can include mechanical conditions, solid, liquid and chemical contaminants as well as speeds and ambient temperature. The sealing system must provide the required sealing performance as specified by the enclosure type and its protection class.

Electric machines typically fall into one of two different enclosure types:

- open machines with ventilation openings that allow external air to pass and cool the windings directly
- totally enclosed machines where the design prohibits the free exchange of air between the inside and outside of the case

The degree of protection provided by an enclosure of electric machines is classified with its Internal Protection (IPxy) value as defined in IEC 60034-5.

The value X represents the degree of protection to persons and parts of the motor inside the enclosure.

The value Y represents the degree of protection provided by the enclosure with respect to harmful effects due to water ingress.

As the value for X or Y increases, so do the requirements on the sealing system.

The required sealing performance of an electric machine can be attained with integral bearing seals, external (e.g. shaft or labyrinth) seals or a combination of the two.

For small motors in a dry and clean environment, the combination of a gap seal between shaft and housing and capped bearings can be sufficient and is commonly used (→ **fig. 1**).

Medium to large motors with open, regreasable bearings may require combinations of radial-, axial- and/or labyrinth seals.

This chapter is a brief introduction to the SKF sealed bearings and SKF industrial shaft seals commonly used in electric machines. Due to the complexity of sealing solutions, only basic information is provided. For additional information, consult the *SKF Rolling Bearings Catalogue* and the *SKF Industrial shaft seals catalogue*. Both are available online via skf.com. Alternatively, contact the SKF application engineering service.

Guideline values

Since several factors simultaneously affect the sealing system and seal performance, all stated values in graphs and tables in this chapter should be considered as guidelines only and not as absolute values for practical applications.

Sealing system of small motor in dry and clean environment

Fig. 1

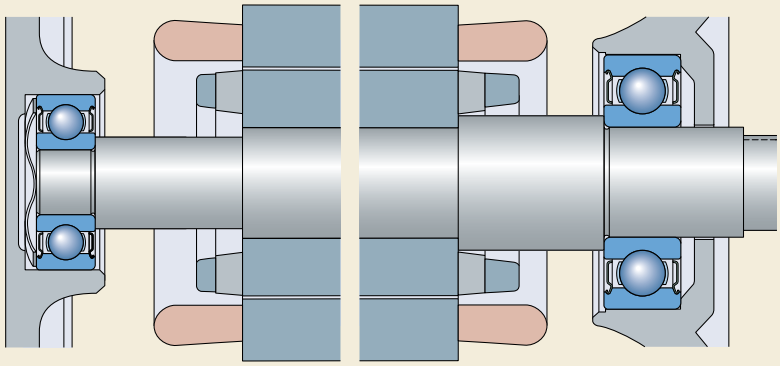

Integral bearing seals

The purpose of an integral bearing seal is to keep the lubricant in and contaminants like dirt and water out of the bearing.

Seals for bearing arrangements should provide maximum protection with a minimum amount of friction and wear, even under the most arduous operating conditions. Because bearing performance and service life are so closely tied to the effectiveness and cleanliness of the lubricant, the seal is a key component in a bearing system.

Capped deep groove ball bearings

SKF supplies the most popular sizes of deep groove ball bearings capped with a seal or shield on one or both sides. Selection guidelines for different sealing solutions under various operating conditions are listed in **table 1**.

However, these guidelines cannot substitute for testing a seal in its application. The standard capping arrangements are:

Metal shields (suffix Z)

Bearings with shields are widely used in motors when the contamination levels are relatively low and there is a need for good grease retention during operation.

Shields are made of sheet steel. They are fitted in the outer ring and do not make contact with the inner ring.

Attainable speeds and temperature limits are governed by the cage and grease but not by the shield.

Non-contact seals (suffix RZ)

Bearings with non-contact seals can be operated at the same speeds as bearings with shields, but with improved sealing effectiveness.

These seals form an extremely narrow gap with the land of the inner ring shoulder to provide a good seal without affecting the speed limits of the bearing. The operating temperature is limited by the cage, grease and sealing lip material.

Low-friction seals (suffix RSL)

Bearings with low-friction seals can accommodate the same speeds as bearings with shields, but with improved sealing effectiveness.

The seals are practically non-contacting with a recess in the inner ring shoulder. The operating temperature is limited by the cage, grease and sealing lip material.

Contact seals (suffix RSH or RS1 for bearings above 52 mm outside diameter)

Bearings with contact seals can operate in harsh environments, where protection against solid and liquid contaminants is required. Due to the contact pressure between the sealing lip and the inner ring, the limiting speed of these bearings is reduced compared to other capped executions. The operating temperature is limited by the cage, grease and sealing lip material.

Table 1

Selection guidelines for SKF sealing solutions

Requirement	Shields	Non-contact seals	Low-friction seals	Contact seals	
	Z	RZ	RSL	RSH	RS1
Low friction	+++	+++	++	○	○
High speed	+++	+++	+++	○	○
Grease retention	○	+	+++	+++	++
Dust exclusion	○	+	++	+++	+++
Water exclusion					
static	–	–	○	+++	++
dynamic	–	–	○	+	+
high pressuree	–	–	○	+++	○

Symbols: +++ = best ++ = very good + = good ○ = fair – = not recommended

Bearing seal materials

A variety of seal materials are available to meet specific application requirements such as operating temperature and compatibility with greases, oils or any other media.

The standard seal for an SKF deep groove ball bearing is made from acrylo-nitrile-butadiene rubber (NBR).

Another seal material which is commonly used in more aggressive (chemical) environments and high temperature applications is a fluorocarbon rubber (FKM), see also warning on **page 60** and **table 3**, **page 61.**

For additional information about bearing seals, please refer to the *SKF Rolling Bearings Catalogue* (→ via skf.com/bearings).

Shaft seals

Shaft seals in electric machines are designed to seal the gap between the rotor shaft and stator housing. Primary seal functions can include but are not limited to:

- retain the lubricant
- exclude contaminants
- seal under pressure

To be effective, shaft seals should, even under unfavourable operating conditions, operate with a minimum of friction and wear. In order to meet the requirements of a variety of operating conditions, SKF industrial shaft seals are manufactured in many different designs and materials.

Selecting an appropriate seal design and material depends on the operating conditions of the application such as:

- type of lubricant
- vertical or horizontal shaft orientation
- speed
- pressure differential
- temperature
- runout and shaft-to-bore misalignment
- external environment

Because the influence of one operating condition typically dominates the seal selection process, there are no universal rules for determining the appropriate seal type or design for a given application.

Selection of seal design

When designing a sealing system, there is a choice of different types of seals. The following is a short list of seals mainly used in electrical machines.

Gap-type seals

The simplest external seal is a gap-type seal, which creates a small gap between the shaft and housing (→ **fig. 2**). This type of seal is adequate for grease lubricated applications that operate in dry, dust-free environments.

Labyrinth seals

Single or multi-stage labyrinth seals (→ **fig. 3**), typically used with grease lubrication, are considerably more effective than simple gap-type seals, but are also more expensive. Their effectiveness can be further improved by periodically applying a water-insoluble grease, such as a grease with a lithium-calcium thickener, via a duct to the labyrinth passages.

Gap type seal

Fig. 2

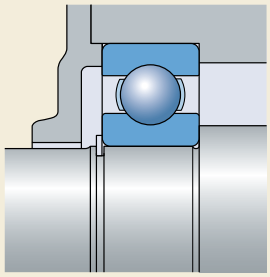

Fig. 3

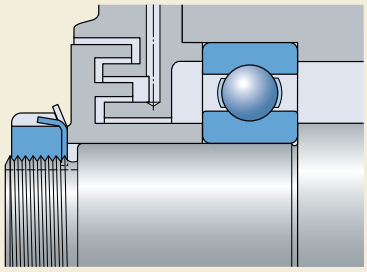

Labyrinth seal for grease lubricated bearing

Felt seals

Felt seals are generally used with grease lubrication. They are simple, cost effective and can be used at circumferential speeds of up to 4 m/s and at operating temperatures up to 100 °C *(205 °F)*. The seal counterface should be machined to a surface roughness $R_a \leq 3{,}2$ µm. The effectiveness of a felt seal can be improved substantially by mounting a simple labyrinth seal as a secondary seal. Before being inserted in its housing groove, felt seals should be soaked in oil at about 80 °C *(175 °F)* prior to mounting.

In electric motors, felt seals are used to protect the motor interior from bearing grease (→ **fig. 4**).

V-ring seals

V-ring seals (→ **fig. 5**) are unique all-rubber seals for rotating shafts. V-rings act as flingers, rotate with the shaft and seal against a surface that is perpendicular to the shaft.

They can be used for lubricant retention or to exclude contaminants. V-rings are often used as secondary seals to protect the primary seals from coarse contaminants.

A maximum surface roughness of R_a = 2,5 µm for circumferential speeds below 1 m/s is recommended. At higher speeds, the R_a value has to be lower.

At circumferential speeds above 8 m/s, the V-ring should be axially fixated by a support ring. At speeds above 12 m/s, the V-ring also needs a radial support. A sheet metal support ring can be used to do this. When circumferential speeds exceed 15 m/s, the sealing lip lifts away from the seal counterface and the V-ring seal becomes a gap-type seal.

MVR axial shaft seals

For added protection in extremely contaminated applications, MVR seals can be used (→ **fig. 6**). Like V-ring seals, MVR seals seal axially and function by combining lip contact with centrifugal "flinging" action. MVR seals are, however, different from V-ring seals in that their rubber element is stretched to fit into a metal case. The metal case is then press fit onto a shaft. The case provides excellent protection from heavy debris and enables the seal to accommodate high rotational speeds without requiring auxiliary clamping devices.

MVR seals are used in those electric machine applications where high levels of contamination reduce the service life of radial shaft seals and bearings.

Felt seal

Fig. 4

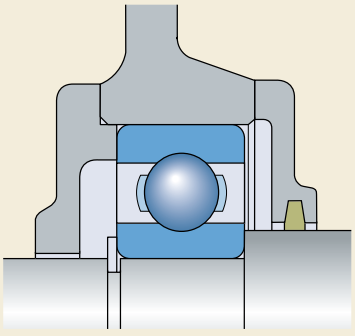

Fig. 5

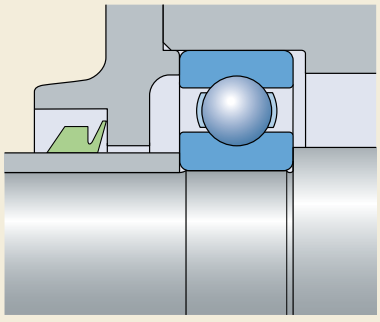

V-ring seal

MVR seals

Fig. 6

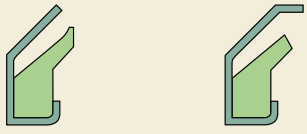

Fig. 7

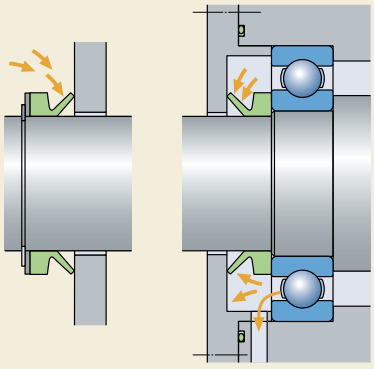

V-ring seal used to exclude contaminants (left) and used for lubricant retention (right)

For best performance, the sealing lip of V-ring and MVR seals should point towards the area that is to be protected, i.e. V-rings used for contaminant exclusion should be mounted outside of the housing (→ **fig. 7** on **page 58**, **left**), while V-rings for lubricant retention should be mounted inside the housing, (→ **fig. 7** on **page 58**, **right**).

Radial shaft seals

Radial shaft seals (→ **figs. 8** and **9**) are contact seals that are used in grease or oil lubricated applications. These seals typically consist of a metal reinforcement or casing, a synthetic rubber body, a sealing lip and a garter spring. The sealing lip is pressed against the shaft by the garter spring. Depending on the seal material and medium to be retained and/or excluded, radial shaft seals can be used at temperatures between –60 and +190 °C (*–75 to +375 °F*).

The edge of the sealing lip and the shaft counterface surface constitute the most important functional area for radial shaft sealing.

The SKF Wave seal design represents an important development in radial shaft seal design. The sealing lip is moulded to a sinusoidal form to considerably extend the contact area (→ **fig. 10** and **11**) on the counterface surface. The sinusoidal form also creates a pumping effect to pump the lubricant back into the bearing system and expel contaminants.

The surface hardness of the seal counterface, i.e. the part of the shaft where the sealing lip makes contact, should be at least 55 HRC at a depth of at least 0,3 mm. In applications where speeds are low, lubrication is good, and contamination levels are minimal, a lower hardness can be acceptable. The surface roughness should be in accordance with ISO 6194-1, within the guidelines of R_a = 0,2 to 0,5 µm. To avoid the pumping effect induced by shaft leads, SKF recommends plunge grinding the counterface.

If the primary purpose of the radial shaft seal is lubricant retention, the seal should be mounted with the lip facing inward (→ **fig. 8**). If its primary purpose is to exclude contaminants, the lip should face outward, away from the bearing (→ **fig. 9**).

Table 2, **page 61** provides a summary of the relative performance of different seal types. The combination of bearing seals with various shaft seal designs increases the number of barriers and improves total sealing effi-

Shaft seal used for lubricant retention

Fig. 8

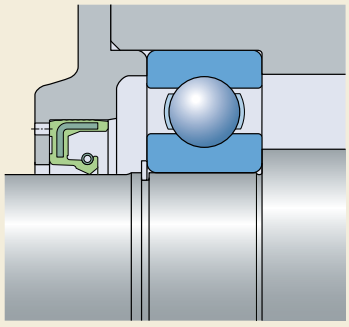

Shaft seal used for contaminant exclusion

Fig. 9

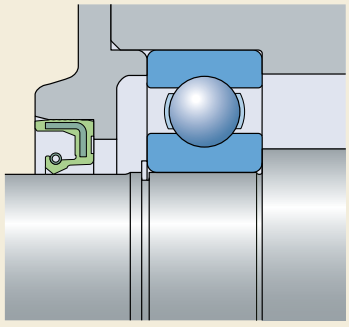

Conventional sealing lip with straight edge

Fig. 10

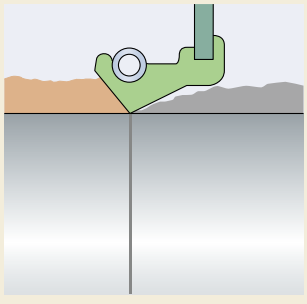

SKF Wave sealing lip with sinusoidal sealing lip edge

Fig. 11

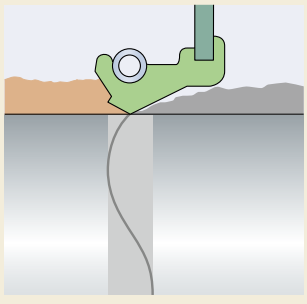

ciency which can be required when operating in a very harsh environment.

Selection of shaft seal material

In addition to its design, the material of the sealing lip can have a significant impact on the seal's performance and reliability.

SKF seals are available in a variety of materials to meet the needs of different electric machine applications.

Silicone rubber (suffix S)

Silicone rubber seals are particularly well suited for very high or very low temperature applications. They should be protected against abrasive substances and should not be exposed to dry running.

Nitrile rubber (suffix R)

Nitrile rubber (NBR), an oil and wear-resistant elastomer, is a general-purpose sealing lip material.

Nitrile rubber tolerates short-term dry running of the sealing lip.

SKF Duralip (suffix D)

SKF Duralip combines the good technical properties of NBR with improved wear resistance. Seals made of this material should be chosen when abrasive contaminants like sand, soil and scale could reach the sealing lip.

SKF Duratemp (suffix H)

SKF Duratemp combines the improved wear resistance of SKF Duralip with an increased high temperature limit. SKF Duratemp is also more resistant to chemicals, weather, ageing and ozone. However, mixtures of oil in air may have a negative effect. SKF Duratemp seals are typically used in heavy industrial applications where extended service life is required.

SKF Duralife (suffix V)

SKF Duralife is characterized by its very good wear, thermal and chemical resistance. Its resistance to weather and ageing from UV light and ozone is also very good and its gas permeability is very slight.

SKF Duralife has exceptional properties even under harsh environmental conditions. Special low-temperature fluoro rubber compounds are available upon request.

Seals made of SKF Duralife can also tolerate dry running of the lip for short periods.

Polytetrafluoroethylene (PTFE)

PTFE is a thermoplastic polymer that is compatible with a wide assortment of lubricants and features chemical resistance that is far superior to that of any other seal material. PTFE has a smooth, dirt-resistant surface. Seals made with PTFE can accommodate high circumferential speeds and provide extended service life. The seals can tolerate dry running and are particularly valuable in highly contaminated applications because of their excellent exclusion ability. PTFE is used for auxiliary seal elements or for primary sealing lips for special applications. For optimum performance, PTFE seal elements require a high-quality seal counterface and extra care during installation.

Table 3, page 61 provides a brief performance overview of the materials commonly used for shaft seals.

WARNING!

Safety precautions for fluoro rubber and polytetrafluoroethylene

Fluoro rubber (FKM) and polytetrafluoroethylene (PTFE) are very stable and harmless under normal operating conditions up to 200 °C *(390 °F)*. However, if exposed to extreme temperatures above 300 °C *(570 °F)*, such as fire or the open flame of a cutting torch, FKM and PTFE give off hazardous fumes. These fumes can be harmful if inhaled, as well as if they contact the eyes. In addition, once the seals have been heated to such temperatures, they are dangerous to handle even after they have cooled. Therefore, they should never come in contact with the skin. If it is necessary to handle bearings with seals that have been subjected to high temperatures, such as when dismounting the bearing, the following safety precautions should be observed:

- Always wear protective goggles, gloves and an appropriate breathing apparatus
- Place the remains of the seals in an airtight plastic container marked with a symbol for "material will etch"
- Follow the safety precautions in the appropriate material safety data sheet (MSDS)

If there is unintentional contact with the seals, wash hands with soap and plenty of water and flush eyes with plenty of water and consult a doctor immediately. If the fumes have been inhaled, consult a doctor immediately. The user is responsible for the correct use of the product during its service life and its proper disposal. SKF takes no responsibility for the improper handling of FKM or PTFE, or for any injury resulting from their use.

Table 2

Seal designs and their relative performance

	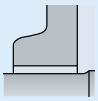 Gap seal	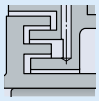 Labyrinth seal	 Felt ring seal	 V-ring seal	 MVR seal	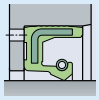 Radial shaft seal
Type	radial	axial/radial	radial	axial	axial	radial
Application						
Grease	Yes	Yes	Yes	Yes	Yes	Yes
Oil	Yes	Yes	Yes	Mist	Mist	Yes
Horizontal	Yes	Yes	Yes	Yes	Yes	Yes
Vertical	No	No	Yes	Yes	Yes	Yes
Performance						
Low friction	+++	+++	+	++	++	+
Speed	+++	+++	+	++	++	+
Endurance/life	+++	+++	+	++	++	+
Lubricant retention	–	–	○	++	++	++ (+++)[1]
Dust exclusion	–	–	+	++	++	+++
Water exclusion						
• Static	–	–	–	+	+	++
• Dynamic	–	–	–	○	○	++ (+++)[1]
• High pressure	–	–	–	–	○	+

Symbols: +++ = best ++ = very good + = good ○ = fair – = not recommended

[1] For SKF Wave sealing lip configuration.

Table 3

Seals materials performance overview

	Silicone rubber	Nitrile rubber	SKF Duralip	SKF Duratemp	SKF Duralife	Polytetrafluoro-ethylene
Designation according						
• ISO	MVQ	NBR	XNBR	HNBR	FPM	PTFE
• ASTM	VMQ	NBR	XNBR	HNBR	FKM	PTFE
• SKF	S	R	D	H	V	T
Temperature [°C]						
• low	–70	–40	–40	–40	–40	–80
• high	+160	+100	+100	+150	+200	+250
Wear resistance	–	○	+	+	++	+++

Symbols: +++ = best ++ = very good + = good ○ = fair – = not recommended

Special seals

Specific motors like gearmotors or motors used in applications where there are strict industry standards like the pharmaceutical industry, require special sealing solutions.

For gearmotors, SKF developed the ICOS unit, which consists of a deep groove ball bearing with an integral oil seal. For more information, see **chapter 8**, **page 134**.

Customized machined seals

For special requirements (e.g. applications, sizes and manufacturing quantities) a wide range of seal designs in proprietary high-performance materials is available. These seals are manufactured with the SKF SEAL JET production system, allowing economical tailor-made sealing solutions.

For additional information about SKF seals, refer to the SKF publications *Industrial shaft seals* and *Customized machined seals – Product range* or contact your local SKF representative. Information is also available via skf.com.

4 Tolerances and fits

Shaft and housing tolerances . . **66**

Recommended fits **68**

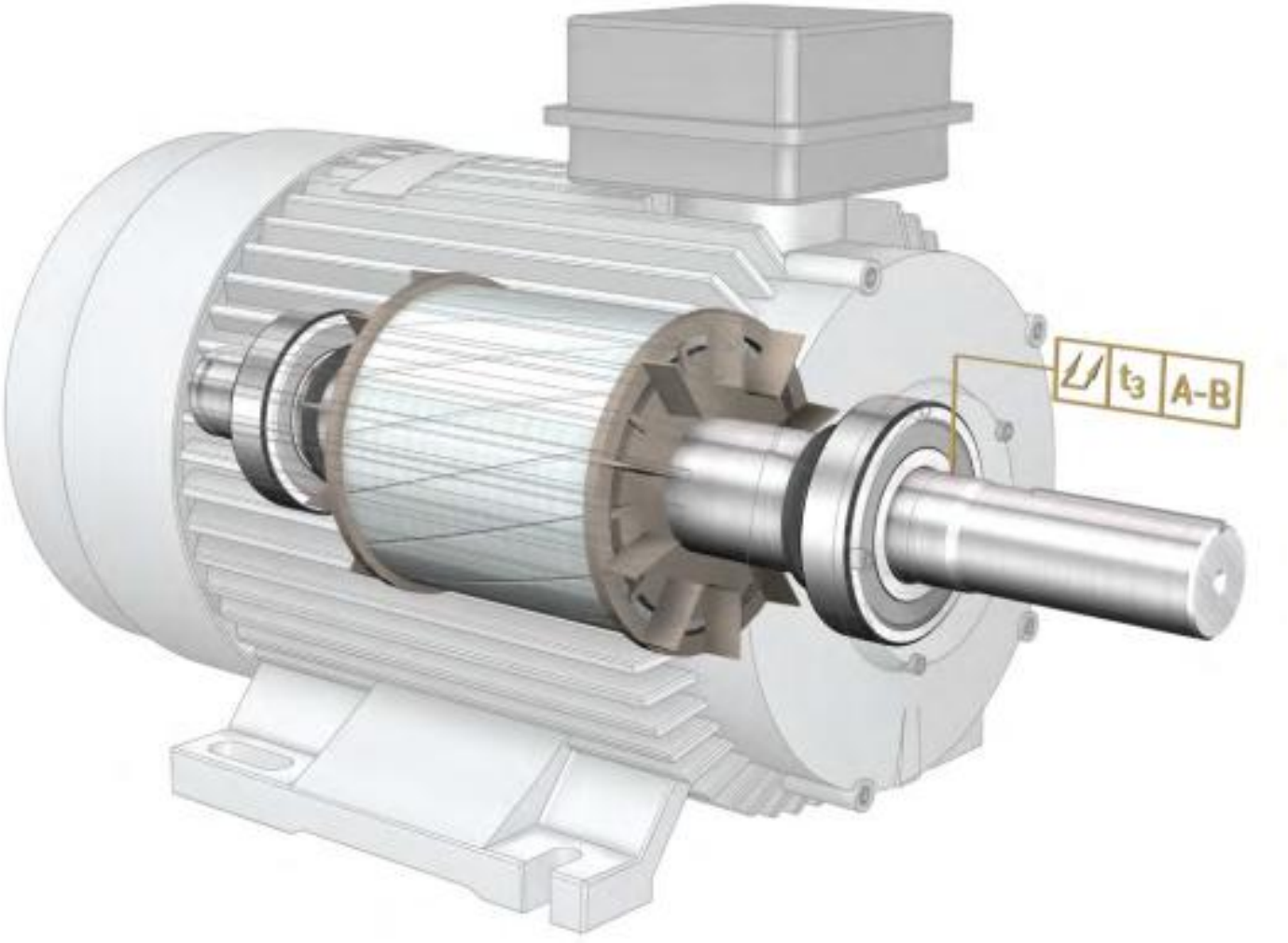

Tolerances and fits

A rolling bearing is a precision product. If the load carrying ability of the bearing is to be fully realized, the outer ring must be supported around its complete circumference and across the entire width of the raceway. This support or bearing seat must be stiff and even and must be accurate enough to meet the objectives of the application. The same holds true for the shaft. It must be straight, smooth, balanced and correctly sized.

Shaft and housing tolerances

To prevent movement of the inner ring relative to the shaft and the outer ring relative to the housing, proper shaft and housing fits must be applied. At the same time, bearing internal clearance in operation must be kept within acceptable limits.

For rolling bearing applications, a limited number of ISO tolerance grades are used.

Fig. 1 illustrates the position of the most commonly used tolerance grades relative to the bearing bore and outside diameter. The light-blue areas on the bearing show the tolerance of the bore and outside diameter respectively. The red bars show the tolerance range for shafts and housings.

Conditions of loading

When selecting the fit for a bearing ring, the occurring/existing load conditions have to be considered. The most common load conditions for electric motors are shown in **fig. 2** on **page 67**.

A rotating load pertains if the bearing ring rotates and the load is stationary, or vice versa. The ring subjected to the rotating load should have an interference fit. The degree of interference depends on the bearing type, size and operating conditions such as operating temperature, lubricant, speed.

A stationary load exists when both the bearing ring and the load are stationary, or when the ring and load rotate at the same speed and direction so that the load zone remains constant. Under these conditions, the bearing ring typically has a loose fit.

When the direction of load is indeterminate, particularly where heavy loads are involved, SKF recommends an interference fit for both rings. The same inner ring fit that you would have for a rotating load is recommended. The outer ring may have a slightly looser fit. Bearings that can accommodate axial displacement internally – like CARB toroidal roller bearings and some cylindrical roller bearings – usually have an interference fit on both rings.

Influence of load magnitude

To prevent creeping (very slow rotational movement of a ring on or in its seat), the fit should be selected relative to the load and bearing size. The heavier the load or the larger the bearing, the tighter the interference fit required.

Tolerances

Fig. 1

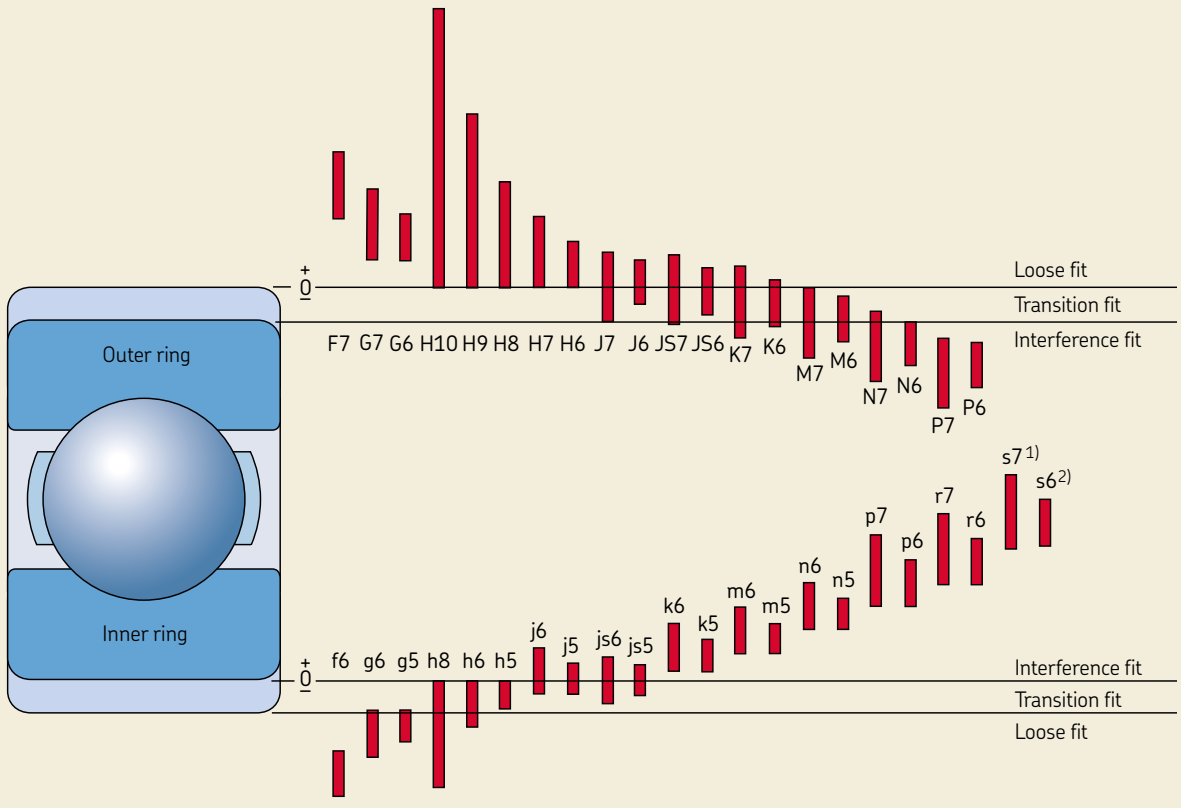

1) $s7_{min} \pm IT7/2$
2) $s6_{min} \pm IT6/2$

Conditions of loading in electric motors

Fig. 2

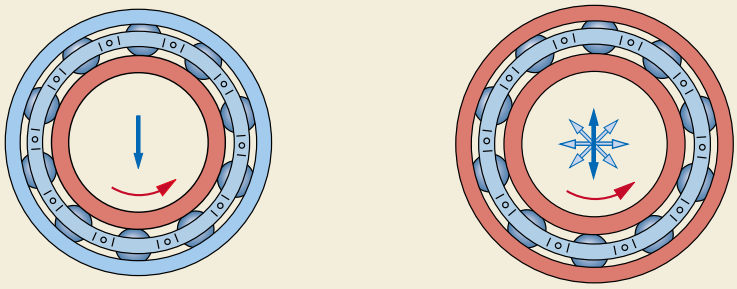

1) Bearings that accommodate axial displacement within the bearing, such as CARB toroidal roller bearings, are typically mounted with an interference fit on both rings.

Importance of appropriate fits

Proper fits for the bearing on the shaft and in the housing are critical to long bearing service life. If the fits are too loose, fretting, smearing and wear can occur (→ **fig. 3**). If heavy loads occur, there is even the risk of ring fracture.

If the fits are too tight, the reduction in bearing internal clearance may result in too little operating internal clearance. This can significantly increase operating temperatures, accelerate lubricant deterioration and cause the bearing to fail prematurely. In severe cases the ring may fracture.

Consequences arising from wrong fits

Fig. 3

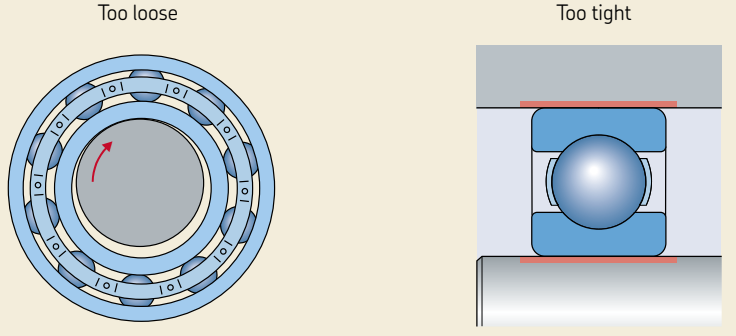

- Relative movement can generate
  - wear
  - fretting corrosion
  - smearing
- Risk of ring fracture

- Excessive reduction of internal clearance can
  - significantly increase operating temperature
  - accelerate lubricant deterioration
- Thermal expansion can cause ring fracture

Recommended fits

For electric motors, recommendations for bearing fits for solid shafts can be found in

Table 1: radial bearings with cylindrical bore
Table 2 on **page 69**: thrust bearings

and for cast iron and steel housings in

Table 3 on **page 69**: radial bearings – non split housings.

These recommendations are based on the general bearing selection guidelines, developments in bearing design and years of experience with a very wide range of bearings in electric motor applications. Modern bearings can carry substantially greater loads than previous conventional bearings and the recommendations reflect these more demanding conditions.

Additional information on recommended fits can be found in the *SKF Rolling Bearings Catalogue* or online via skf.com.

Table 1

Fits for solid steel shafts

Radial bearings with a cylindrical bore

Conditions	Shaft diameter [mm] Ball bearings[2]	Cylindrical roller bearings	CARB toroidal and spherical roller bearings	Tolerance class[1]
Rotating inner ring load or direction of load indeterminate				
Light and variable loads (P ≤ 0,05 C)	≤ 17	–	–	js5
	> 17 to 100	≤ 25	–	j6
	> 100 to 140	> 25 to 60	–	k6
	–	> 60 to 140	–	m6
Normal to heavy loads (P > 0,05 C)	≤ 10	–	–	js5
	> 10 to 17	–	–	j5
	> 17 to 100	–	–	k5
	–	≤ 30	–	k6
	> 100 to 140	> 30 to 50	–	m5
	> 140 to 200	–	–	m6
	–	> 50 to 65	> 40 to 60	n5[3]
	> 200 to 500	> 65 to 100	> 60 to 100	n6[3]
	–	> 100 to 280	> 100 to 200	p6[4]
	> 500	–	–	p7[3]
		> 280 to 500	> 200 to 500	r6[3]
		> 500	> 500	r7[3]
Heavy to very heavy loads and shock loads with difficult working conditions (P > 0,1 C)	–	> 50 to 65	> 50 to 70	n5[3]
	–	> 65 to 85	–	n6[3]
	–	> 85 to 140	> 70 to 140	p6[5]
	–	> 140 to 300	> 140 to 280	r6[6]
	–	> 300 to 500	> 280 to 400	s6min ± IT6/2[5][7]
	–	> 500	> 400	s7min ± IT7/2[5][7]

[1] All ISO tolerance classes are valid with the envelope requirement (such as H7Ⓔ) in accordance with ISO 14405-1.
[2] Ball bearings under normal to heavy loads (P > 0,05 C) often require radial internal clearance greater than Normal when the shaft tolerance classes listed above are used. If radial clearance is greater than Normal, but the operating conditions require tighter fits to prevent the inner ring from creeping, use the following tolerance classes:
- k4Ⓔ for shaft diameters 10 to 17 mm
- k5Ⓔ for shaft diameters > 17 to 25 mm
- m5Ⓔ for shaft diameters > 25 to 140 mm
- n6Ⓔ for shaft diameters > 140 to 300 mm
- p6Ⓔ for shaft diameters > 300 to 500 mm

For additional information, contact the SKF application engineering service.
[3] Bearings with radial internal clearance greater than Normal may be necessary.
[4] Bearings with radial internal clearance greater than Normal are recommended for d ≤ 150 mm. When d > 150 mm, bearings with radial internal clearance greater than Normal may be necessary.
[5] Bearings with radial internal clearance greater than Normal are recommended.
[6] Bearings with radial internal clearance greater than Normal may be necessary. For cylindrical roller bearings, radial internal clearance greater than Normal is recommended.
[7] For tolerance values see **table 5**, **page 71**.

Note

If tight fits need to be applied and there is a risk that the internal clearance within the bearing will be significantly reduced due to these tight fits and/or due to the temperature difference between the inner and outer ring, a bearing with a larger internal clearance than normal should be used (→ **chapter 1**, *Bearing selection*, **page 15**).

When a bearing in an electric motor needs to be replaced, the shaft and housing seats should be checked. Information on the applied fits should be found in the maintenance manual of the motor manufacturer. If this information is not available, refer to **table 1** on **page 68** and **tables 2** and **3** on **page 69**.

Table 2

Fits for solid steel shafts (for thrust bearings)

Conditions	Shaft diameter [mm]	Tolerance class[1)]
Combined radial and axial loads on spherical roller thrust bearings		
Stationary load on shaft washer	≤ 250 > 250	j6 js6
Rotating load on shaft washer, or direction of load indeterminate	≤200 > 200 to 400 > 400	k6 m6 n6

[1)] All ISO tolerance classes are valid with the envelope requirement (such as H7Ⓔ) in accordance with ISO 14405-1.

Table 3

Fits for non-split cast iron and steel housings (for radial bearings)

Conditions	Examples	Tolerance class[1)2)]	Displacement of outer ring
Stationary outer ring load			
Loads of all kinds	Catalogue electric motors	**H6** (**H7**[3)])	Can be displaced
Heat conduction through shaft, efficient stator cooling	Large electric machines with spherical roller bearings. Induction motors	**G6** (**G7**[4)])	Can be displaced
Accurate and quiet running	Small electric motors	**J6**[5)]	Can be displaced in most cases
Direction of load indeterminate			
Light to normal loads (P ≤ 0,1 C) axial displacement of outer ring desirable	Medium sized electric machines	**J7**[6)]	Can be displaced in most cases
Normal to heavy loads (P > 0,05 C), axial displacement of outer ring unnecessary	Medium-sized or large electric machines with cylindrical roller bearings or CARB toroidal roller bearings	**K7**	Cannot be displaced in most cases
Heavy shock loads	Heavy traction motors	**M7**	Cannot be displaced

[1)] All ISO tolerance classes are valid with the envelope requirement (such as H7Ⓔ) in accordance with ISO 14405-1.
[2)] For all bearings, when D ≤ 100 mm, IT6 tolerance grade is often preferable and is recommended for bearings with thin-walled rings, such as in the 7, 8 or 9 diameter series. For these series, total radial run-out tolerances IT4 are also recommended.
[3)] For large bearings (D > 250 mm). If temperature differences between outer ring and housing > 10 °C, G7 should be used instead of H7
[4)] For large bearings (D > 250 mm). If temperature differences between outer ring and housing > 10 °C, F7 should be used instead of G7
[5)] When easy displacement is required, use H6 instead of J6
[6)] When easy displacement is required, use H7 instead of J7

Fits for aluminium housings

The coefficient of expansion for aluminium is more than two times greater than for cast iron or steel. Therefore, for motors with aluminium housings in particular, steps should be taken to support the outer ring and prevent it from rotating in its seat. To do this, start by selecting a tighter tolerance for the housing, e.g. use a J7 instead of an H7. A more effective way to prevent the outer ring from rotating is to cut an O-ring groove into the bearing seat and install a rubber O-ring. When designed correctly, the O-ring will apply enough pressure so that the bearing outer ring will be held in place and unable to spin in the housing bore (→ **fig. 4**, **chapter 2** on **page 42**).

Influence of temperature difference when selecting the housing fit

Electric motors and generators generate heat in the rotor and stator coils and are often equipped with an internal fan for cooling purposes. The forced airflow dissipates unwanted heat from the housing (motor-end shield) and can create a temperature difference between the housing and the bearing outer ring. This can cause a problem with the non-locating bearing if it needs to move axially in its seat to accommodate thermal elongation of the shaft. To correct the problem, switch to a looser housing fit, i.e. from H7 to G6, or place the axially free bearing in a position where there is hot air flow against the end shield.

Table 4

Geometrical tolerances for bearing seats on shafts and in housings

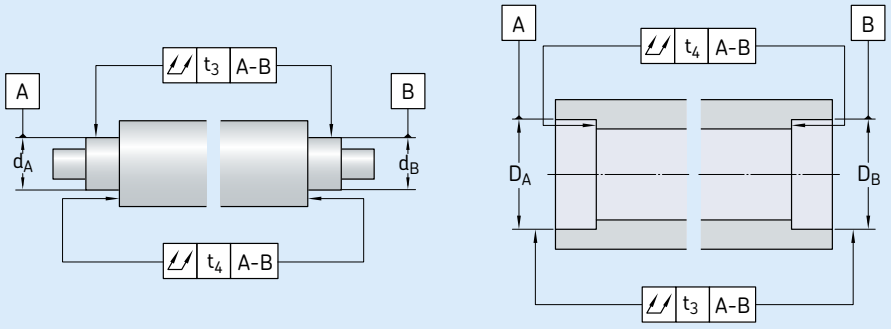

Surface Characteristic	Symbol for geometrical characteristic	tolerance zone	Permissible deviations Bearings of tolerance class[1)] Normal	P6	P5	
Cylindrical seat						
Total radial runout	⌭	t_3	IT5/2	IT4/2	IT3/2	IT2/2
Flat abutment						
Total axial runout	⌭	t_4	IT5	IT4	IT3	IT2

Explanation

For normal demands

For special demands with respect to running accuracy or even support

[1)] For bearings with a tolerance class higher than Normal (tolerance class P4 etc.), refer to Super-precision bearings (→ skf.com/super-precision).

Rotating loads or vibrations and loose outer ring fit

In some applications, the direction of load is indeterminate, such as:

- small motors with light rotor mass, together with an unbalance
- motors with high and strong vibration levels, such as generators attached to combustion engines

Under these conditions, if a non-separable bearing, like a deep groove ball bearing, is used in the non-locating position, there is a risk that the outer ring will creep in its seat, and cause excessive wear. One such example is a marine application where motors are submitted to relatively high vibrations.

There are two simple ways to hold the outer ring in place and virtually eliminate the wear caused by the ring creeping in its seat.

The simplest solution is to axially preload the bearings with springs (applied for small motors). Another method is to install an O-ring in a groove in the housing. Depending on the application, either of these methods can be used to hold the outer ring in place.

If neither of these methods is sufficient, the housing seat can undergo heat treatment or surface treatment or a hardened insert can be used. Increasing the surface hardness above 30 to 35 HRC has been proven to be effective.

SKF antifret LGAF 3E

SKF offers a high performing anti-fretting agent, SKF LGAF 3E. This is a greasy, smooth paste specially developed to prevent fretting corrosion between metal surfaces in loose fit arrangements.

Geometrical tolerances of bearing seats and abutments

A cylindrical bearing seat and abutment shoulder, whether they are on the shaft or in the housing, should correspond to the tolerance class of the selected bearing (→ **table 4** on **page 70** and **table 5** on **page 71**). Tolerances that should be considered include:

- tolerances for total radial run-out (t_3)
- tolerances for total axial run-out (t_4)

For additional information about tolerances and fits, as well as geometrical tolerances for bearing seats and abutments on shafts and in housings, go to skf.com or consult the *SKF Rolling Bearings Catalogue*.

Table 5

ISO tolerance grades for dimensions

Nominal dimension		Tolerance grade				
over	incl.	IT4 max.	IT5	IT6	IT7	IT8
mm		µm				
1	**3**	3	4	6	10	14
3	**6**	4	5	8	12	18
6	**10**	4	6	9	15	22
10	**18**	5	8	11	18	27
18	**30**	6	9	13	21	33
30	**50**	7	11	16	25	39
50	**80**	8	13	19	30	46
80	**120**	10	15	22	35	54
120	**180**	12	18	25	40	63
180	**250**	14	20	29	46	72
250	**315**	16	23	32	52	81
315	**400**	18	25	36	57	89
400	**500**	20	27	40	63	97
500	**630**	–	32	44	70	110
630	**800**	–	36	50	80	125



5 Lubrication

Lubrication 73

Grease lubrication 74

Grease selection 76

Relubrication intervals 80

Grease life for capped bearings . 86

Oil lubrication 88

Lubrication

If rolling bearings are to operate reliably and realize their full service life potential, they must be adequately lubricated. The function of the lubricant is to form a protective oil film that separates the rolling contact surfaces and prevent metal-to-metal contact. The lubricant also protects the bearing and related components against corrosion. When grease is used as a lubricant, it can also help protect the bearing against contaminants such as dirt, dust and water. Recirculating oil lubrication systems typically have a filtering system that removes contaminants from the fluid, which prolongs the life of the lubricant and the service life of the bearings.

Lubrication

Some important properties of a lubricant include viscosity, film forming ability and consistency (for grease). The most important determining factors of the film thickness are:

- bearing size
- rotational speed
- bearing temperature
- load
- base oil viscosity

Lubrication conditions – the viscosity ratio κ

The effectiveness of a lubricant is primarily determined by the degree of surface separation between the rolling contact surfaces. If an adequate lubricant film is to be formed, the lubricant must have a given minimum viscosity when the application has reached its operating temperature. The condition of the lubricant is described by the viscosity ratio κ as the ratio of the actual viscosity ν to the rated viscosity ν_1 for adequate lubrication, when the lubricant is at normal operating temperature. It follows from using

$$\kappa = \frac{\nu}{\nu_1}$$

where

κ = viscosity ratio
ν = actual operating viscosity of the lubricant [mm^2/s]
ν_1 = rated viscosity of the lubricant depending on the bearing mean diameter and rotational speed [mm^2/s].

See **diagrams 6** and **7** on **page 89**.

The information applies equally to the base oil viscosity of lubricating greases and oils.

For electric motors under normal operating conditions, the viscosity ratio κ should be larger than 1.

Grease lubrication

Under normal speed and temperature conditions, the bearings in electric motors are usually lubricated with grease. Grease has a number of advantages when compared to oil. It enables simpler, more cost-effective housing and sealing designs, while offering better adhesion and protection against contaminants.

Typical grease lubrication mechanisms in rolling bearings are shown in **fig. 1**.

Fig. 1

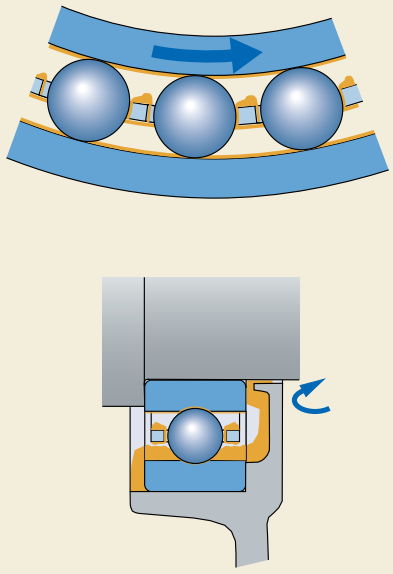

Lubrication mechanisms in a rolling bearing

What is grease?

A lubricating grease consists of a mineral or synthetic base oil combined with a thickener, usually a metallic soap. However, other thickeners such as polyurea can be used for superior high temperature performance. The base oil constitutes 85–90% of the grease and the thickener around 10%. Additives will also be included to enhance certain properties of the grease.

Consistency

Greases are divided into various consistency classes according to the National Lubricating Grease Institute (NLGI) scale. The consistency of grease used for bearing lubrication should not change drastically when operated within its specified temperature range after mechanical working. Greases that soften at elevated temperatures may leak from the bearing arrangement. Those that stiffen at low temperatures may restrict rotation of the bearing or have insufficient oil bleeding.

For bearings in electric motors and generators normally two grades are used:

Soft grease: low consistency, NLGI grade 2
Stiff grease: high consistency, NLGI grade 3.

Temperature range – the SKF traffic light concept

The temperature range over which a grease can be used depends largely on the type of base oil and thickener used as well as the additives. The relevant temperatures are schematically illustrated in **diagram 1**, **page 75** in the form of a “double traffic light”.

The extreme temperature limits, i.e. low temperature limit and the high temperature limit, are well defined:

- The low temperature limit (LTL), is the lowest temperature at which the grease will allow the bearing to be started up without difficulty. It is largely determined by the type of base oil and its viscosity.
- The high temperature limit (HTL) is determined by the type of thickener, and for soap based greases, it coincides with the dropping point. The dropping point indicates the temperature at which the grease loses its consistency and becomes a fluid.

It is evident that operation below the low temperature limit and above the high temperature limit is not advised as shown in **diagram 1** by the red zones. Although grease suppliers indicate the specific values for the low and high temperature limits in their product information, the really important temperatures for reliable operation are given by the SKF values for:

- the low temperature performance limit (LTPL)
- the high temperature performance limit (HTPL)

It is within these two limits, the green zone in **diagram 1**, where the grease will function reliably and grease life can be calculated. Since the definition of the high temperature performance limit is not standardized internationally, care must be taken when interpreting suppliers' data.

At temperatures above the high temperature performance limit (HTPL), grease will age and oxidize with increasing rapidity and the by-products of the oxidation will have a detrimental effect on lubrication. Therefore, operating with temperatures in the amber zone, between the high temperature performance limit (HTPL) and the high temperature limit (HTL) should occur only for very short periods.

An amber zone also exists for low temperatures. With decreasing temperature, the tendency of grease to bleed decreases and the stiffness (consistency) of the grease increases. This will ultimately lead to an insufficient supply of lubricant to the contact surfaces of the rolling elements and raceways. In **diagram 1**, this temperature limit is indicated by the low temperature performance limit (LTPL). Values for the low temperature performance limit are different for roller and ball bearings. Since ball bearings are easier to lubricate than roller bearings, the low temperature performance limit is less important for ball bearings.

Important
For roller bearings, however, serious damage will result when the bearings are operated continuously below this limit.

Short periods in this zone e.g. during a cold start, are not harmful since the heat caused by friction will bring the bearing temperature into the green zone.

Commonly used SKF greases are listed in **diagram 2**.

Diagram 1

The SKF traffic light concept

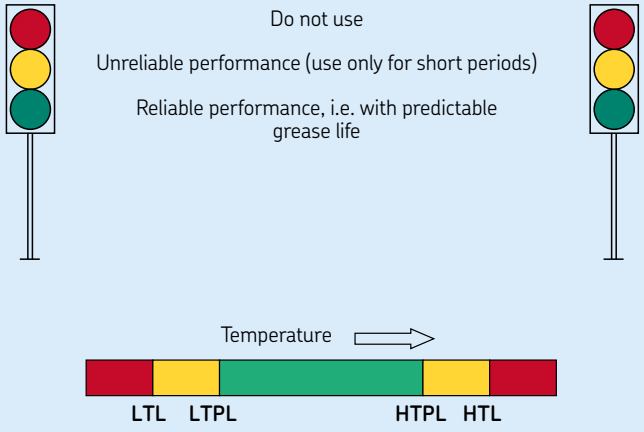

LTL Low temperature limit
LTPL Low temperature performance limit
HTPL High temperature performance limit
HTL High temperature limit

Diagram 2

The SKF traffic light concept – SKF greases in electric motors

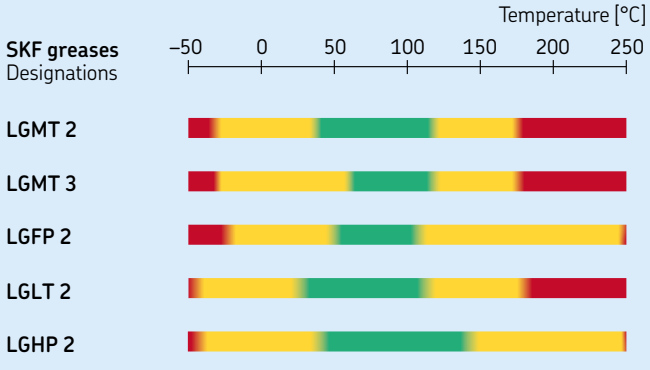

For operating temperatures above 150 °C, SKF LGET 2 is recommended

Additives

To obtain grease with special properties one or several additives are included. Below are some of the most commonly used:

- Anti-rust additive to improve the protection against corrosion
- Anti-oxidants to delay the degradation of the greases
- EP (extreme pressure) additives to increase the load carrying capacity of the oil film. Note that EP additives may be harmful to bearings above 80 °C *(176 °F)*. In electric motor applications, EP additives are almost never recommended due to moderate loads applied and relatively high operating temperatures.

Grease selection

Using the best and most suitable lubricant related to specific operating conditions is of crucial importance in obtaining appropriate motor performance and reliability. For a correct selection please consider:

- bearing type and size
- operating temperature
- load
- speed range
- operating conditions, e.g. vibration levels, orientation of the shaft (horizontal or vertical)
- cooling
- sealing efficiency
- environment

SKF greases

For small and medium sized bearings where the grease life is longer than the calculated SKF rating life of the bearings, one single filling of grease is sufficient. The grease must then be retained in the bearings and prevented from escaping.

Diagram 3

SKF standard and application specific greases for greased-for-life deep groove ball bearings in electric motors

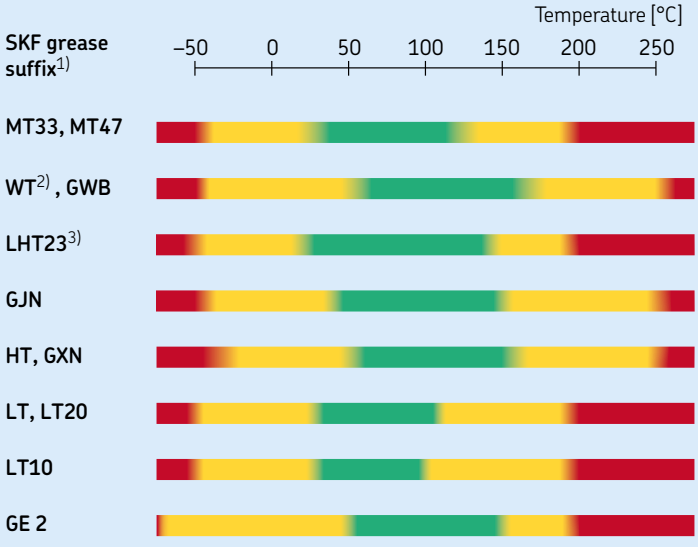

1) Grease suffix in the bearing designation, e.g. 6204-2Z/C3WT. Bearings with standard greases do not have a designation suffix. Information about the standard grease is provided in **table 1**, **page 77.**
2) High performance grease for small/medium electric motors. Wide temperature range
3) Very silent, low friction grease for small electric motors. Wide temperature range
4) GE 2 is the standard factory fill grease for low friction energy efficient (E2) deep groove ball bearings

For sealed and greased-for-life bearings in electric motor applications, SKF recommends the greases listed in **diagram 3**, **page 76**.

Table 2 lists SKF greases suitable for relubricating open bearings in electric motors.

Never mix different grease types since they may not be compatible (→ **table 3**, **page 78**). Doing so could result in reduced performance.

It is also important to consider the grease compatibility with rubber seals and different cage materials:

- Greases containing ester oils are in general not compatible with ACM rubber (ACM, alkyl acrylate copolymer, is a type of rubber that has outstanding resistance to hot oil and oxidation).
- Standard SKF rubber mixes are compatible with standard SKF greases.
- EP additives containing sulphur act aggressively on brass cages above 100 °C *(210 °F)*.
- EP additives may act aggressively on standard polyamide 66 cage material, (designation suffix TN9 or P), above 110 °C *(230 °F)*.

Table 1 shows the SKF standard greases for factory filled shielded or sealed deep groove ball bearings depending on the bearing series and bearing bore and outer diameter values.

Table 1

SKF standard greases for shielded or sealed deep groove ball bearings

Bearings of diameter series	SKF standard greases in bearings with outside diameter D ≤ 30 mm d < 10 mm	d ≥ 10 mm	30 < D ≤ 62 mm	D > 62 mm
8, 9	LHT23	LT10	MT47	MT33
0, 1, 2, 3	MT47	MT 47	MT47	MT33

Bearing operating parameters – explanations to descriptions in table 2

Temperature

EH =	Extremely high	> 150 °C *(300 °F)*
H =	High	> 100 °C *(210 °F)*
M =	Medium, moderate	50 to 100 °C *(120 to 210 °F)*
L =	Low	< 50 °C *(120 °F)*

Load

H =	High	C/P ~4
M =	Medium, moderate	C/P ~8
L =	Low	C/P ≥15

Speed for ball bearings

EH =	Extremely high	n d_m over 700 000
VH =	Very high	n d_m up to 700 000
H =	High	n d_m up to 500 000
M =	Medium, moderate	n d_m up to 300 000
L =	Light	n d_m below 100 000

Speed for roller bearings		Needle roller, spherical roller, tapered roller, CARB toroidal roller bearings	Cylindrical roller bearings
H =	High	n d_m over 210 000	n d_m over 270 000
M =	Medium, moderate	n d_m up to 210 000	n d_m up to 270 000
L =	Low	n d_m up to 75 000	n d_m up to 75 000

n d_m = rotational speed, r/min × 0,5 (D + d), mm

Table 2

Suitable SKF greases for relubrication of bearings in electric motors

SKF grease designation	Use, properties
LGMT 2	Small bearings (outside diameter up to approx. 62 mm) Light to moderate loads Moderate temperatures Low friction, quiet, good protection against corrosion
LGMT 3	Medium-sized bearings (outside diameter > 62 mm up to approx. 240 mm) Moderate loads Moderate temperatures Multi-purpose grease, good protection against corrosion. Vertical shafts
LGLT 2	Small, lightly loaded bearings at high speeds Low temperatures Low friction, water repellant
LGFP 2	Low temperatures Food compatible Water repellant
LGHP 2	Wide temperature range Low friction at start-up, quiet, good protection against corrosion High speeds Vertical shafts Very long life at high temperatures

How to grease a bearing

Greasing techniques vary according to the design of the bearing and its housing. However, one thing that remains constant over all bearing types is that overfilling the bearing cavity with grease will lead to increased temperatures and possible bearing failure. When greasing a bearing, be sure to leave enough space in the housing so that grease can be ejected from the bearing during start-up. In high speed motors, grease quantity should be kept at a low level. For further information, contact the SKF application engineering service.

Whenever possible, open bearings should be greased after they have been mounted (→ **fig. 2**).

Non-separable bearings, such as deep groove ball bearings, angular contact ball bearings, spherical roller bearings and CARB toroidal roller bearings, should be filled with grease from both sides if possible. In many cases, the space is so limited that it is not possible to grease the bearing from the side when it is mounted on the rotor. In this case, it should be greased from the front with a grease gun, e.g. SKF 1077600 or grease packer, e.g. SKF LAGP 400. Make sure that the bearing is completely filled and that the grease has penetrated the bearing and appears on the other side.

Of the bearing types used in electric motor applications, cylindrical roller bearings are separable and the most commonly used one is the NU design (two flanges on the outer ring, none on the inner ring).

The outer ring with cage and rolling elements can, and should, be greased when in the separated state during the mounting operation.

Mount the inner ring on the shaft and apply a thin layer of grease to the raceway in order to prevent scratching of the inner ring when mounting (→ **chapter 6**, **page 93**).

Apply grease in the outer ring, cage and rolling elements and make sure all spaces are well filled. Mount the outer ring in the housing (motor shield). Then proceed with the assembly of the motor shield to the motor housing. Finally, turn the rotor manually at low speed several times to ensure that the outer ring raceway is greased.

Table 3

Grease compatibility

Base oils	Mineral oil	Ester oil	Polyglycol	Silicone: menthyl	Silicone: phenyl	Polyphenylether
Mineral oil	+	+	–	–	+	•
Ester oil	+	+	+	–	+	•
Polyglycol	–	+	+	–	–	–
Silicone: menthyl	–	–	–	+	+	–
Silicone: phenyl	+	+	–	+	+	+
Polyphenylether	•	•	–	–	+	+

+ = compatible, – = incompatible, • = individual testing required

Corresponding base oil type of SKF greases is to be found on the SKF grease specification datasheet.

Fig. 2



Greasing a deep groove ball bearing mounted on a rotor shaft

Grease life

The life expectancy of grease depends on several factors including the type of bearing, the type of grease, the orientation and speed of the motor and the operating temperature of the bearings. For instance, roller bearings have shorter relubricating intervals than ball bearings. Other factors to consider are the sealing arrangement, operating environment and contamination.

For small ball bearings, grease life usually exceeds the service life of the motor. As a result, these bearings are usually fitted with seals or shields, and greased-for-life.

However, if the grease life is shorter than the required bearing life of the motor, the bearings need to be relubricated while the grease is still performing satisfactorily.

Replenishment

For replenishment of grease lubricated bearings in electric motors, use the motor manufacturer's recommendations, if available. Otherwise, suitable quantities for replenishment from the side of a bearing (like for deep groove ball bearings or cylindrical roller bearings) can be obtained from

$$G_p = 0{,}005\ D\ B$$

and for replenishment through the annular groove and lubrication holes in the bearing outer ring (like for SKF spherical roller bearings) from

$$G_p = 0{,}002\ D\ B$$

where
G_p = grease quantity to be added when replenishing [g]
D = bearing outside diameter [mm]
B = bearing width [mm].

Relubrication intervals

It is only possible to base recommendations on statistical rules; the SKF relubrication intervals are defined as the time period at the end of which 99% of the bearings are still reliably lubricated. This represents the L_1 grease life.

The relubrication intervals t_f for bearings on horizontal shafts under normal and clean conditions and operating at 70 °C can be obtained from **diagram 4** as a function of:

- the speed factor A multiplied by the relevant bearing factor b_f where
  $A = n\ d_m$
  n = rotational speed [r/min]
  d_m = bearing mean diameter
  $= 0{,}5\ (d + D)$ [mm]
  The factor b_f depends on the bearing type. Recommended limits for the speed factor A, depending on the load ratio, and values for b_f are provided in **table 4**, **page 81**.
- the load ratio C/P

The relubrication interval t_f is an estimated value, valid for an operating temperature of

Diagram 4

Relubrication intervals at operating temperatures of 70 °C *(160 °F)*

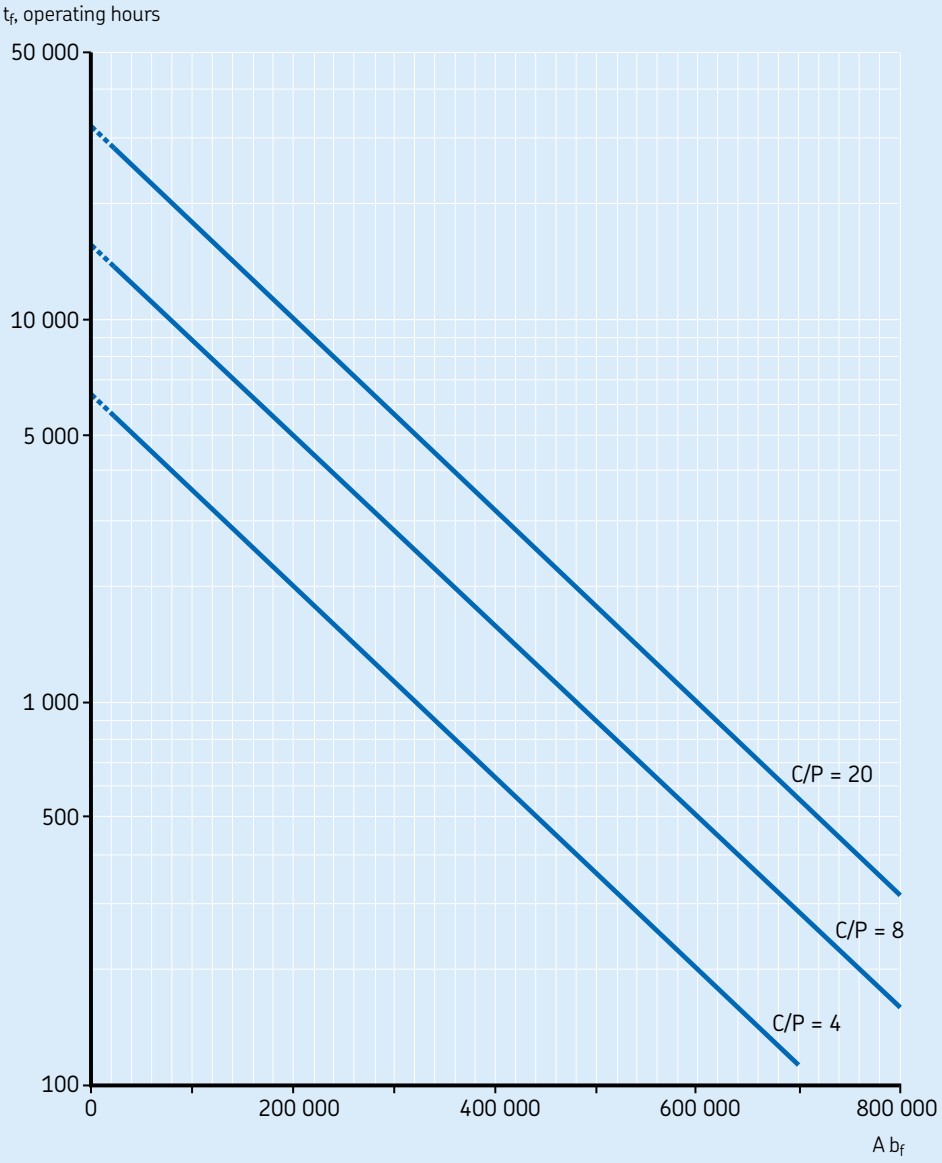

70 °C, using good quality lithium thickener/ mineral oil greases. When bearing operating conditions differ, adjust the relubrication intervals obtained from **diagram 4**, **page 80** according to the information given under *Deviating operating conditions and bearing type*, **page 82**.

If the speed factor A exceeds a value of 70% of the recommended limit according to **table 4**, or if ambient temperatures are high, SKF recommends checking the operating temperature and whether a suitable lubricant is used (→ **diagram 2**, **page 75**).

When using high performance greases, a longer relubrication interval and grease life may be possible. Contact the SKF application engineering service for additional information. See also the section *Grease life for capped bearings*, starting on **page 86**.

Table 4

Bearing factors and recommended limits for the speed factor A

Bearing type[1]	Bearing factor b_f	Recommended limits for the speed factor A for load ratio C/P ≥ 15	C/P ≈ 8	C/P ≈ 4
–	–	mm/min		
Deep groove ball bearings	1	500 000	400 000	300 000
Angular contact ball bearings	1	500 000	400 000	300 000
Cylindrical roller bearings				
– non-locating, bearing	1,5	450 000	300 000	150 000
– locating bearing, without external axial loads or with light but alternating axial loads	2	300 000	200 000	100 000
– locating bearing, with constantly acting light axial load	4	200 000	120 000	60 000
Spherical roller bearings				
– when load ratio $F_a/F_r < e$ and $d_m \leq 800$ mm				
series 213, 222, 238, 239	2	350 000	200 000	100 000
series 223, 230, 231, 232, 240, 248, 249	2	250 000	150 000	80 000
series 241	2	150 000	80 000[2]	50 000[2]
– when load ratio $F_a/F_r < e$ and $d_m > 800$ mm				
series 238, 239	2	230 000	130 000	65 000
series 230, 231, 232, 240, 248, 249	2	170 000	100 000	50 000
series 241	2	100 000	50 000[2]	30 000[2]
– when load ratio $F_a/F_r > e$				
all series	6	150 000	50 000[2]	30 000[2]
CARB toroidal roller bearings				
– with cage	2	350 000	200 000	100 000
Spherical roller thrust bearings				
– pure axial load and rotating shaft washer	4	200 000	120 000	60 000

[1] The bearing factors and recommended limits for the speed factors apply to bearings with standard internal geometry and standard cage execution. For alternative internal bearing design and special cage execution, contact the SKF application engineering service
[2] For higher speeds, oil lubrication is recommended

Deviating operating conditions and bearing type

Operating temperature

To account for the accelerated ageing of grease with increasing temperatures, SKF recommends halving the intervals obtained from **diagram 4**, **page 80** for every 15 °C *(27 °F)* increase in operating temperature above 70 °C *(160 °F)*, remembering that the high temperature performance limit for the grease (→ **diagrams 1** and **2**, **page 75**, HTPL) should not be exceeded.

The relubrication interval t_f may be extended at temperatures below 70 °C *(160 °F)* if the temperature is not close to the lower temperature performance limit (→ **diagram 1**, **page 75**, LTPL). A total extension of the relubrication interval t_f by more than a factor of two is never recommended. In case of thrust roller bearings, t_f values obtained from **diagram 4**, **page 80** should not be extended.

For many applications, there is a practical grease lubrication limit, when the bearing ring with the highest temperature exceeds an operating temperature of 100 °C *(210 °F)*. Above this temperature, special greases should be used. In addition, the temperature limit of the bearing cage or seals should be taken into consideration. In electric machines, bearings often operate at temperatures close to 100 °C *(210 °F)*. For bearing operating temperatures above 100 °C *(210 °F)* SKF LGHP 2 grease is a suitable selection (→ **diagram 2**, **page 75**).

For high temperature applications, contact the SKF application engineering service.

Vertical shafts

For bearings on vertical shafts, the intervals obtained from **diagram 4**, **page 80** should be halved. The use of a good seal or retaining shield is a prerequisite to prevent grease leaking from the bearing arrangement.

Vibration

Moderate vibration will not have a negative effect on grease life, but high vibration and shock levels, such as those in vibrating screen applications, will cause the grease to churn. In these cases, the relubrication interval should be reduced. If the grease becomes too soft, grease with a better mechanical stability or grease with higher stiffness up to NLGI 3 should be used.

Outer ring rotation

In applications where the outer ring rotates and radial bearings considered, the speed factor A is calculated differently: in this case, use the bearing outside diameter D instead of d_m. The use of a good sealing mechanism is a prerequisite in order to avoid grease loss.

For applications where there are high outer ring speeds (i.e. > 40% of the bearing reference speed), greases with a reduced bleeding tendency should be selected.

For spherical roller thrust bearings with a rotating housing washer, oil lubrication is recommended.

Contamination

In case of ingress of contaminants, more frequent relubrication than indicated by the relubrication interval will reduce the number of foreign particles, hence reducing the damaging effects caused by the over rolling of these particles. Fluid contaminants (water, process fluids) also call for a reduced relubrication interval. In case of severe contamination, continuous lubrication should be considered. Automatic lubricators like SKF SYSTEM 24 are most suitable under these conditions.

Very low speeds

Selecting the proper grease and grease fill is very important in low speed applications.

Bearings that operate at very low speeds under light loads require a low consistency grease. Bearings that operate at low speeds under heavy loads need a high viscosity grease with very good EP characteristics. Grease viscosity should be selected according to the procedures described in the *SKF Rolling Bearings Catalogue*.

High speeds

Relubrication intervals for bearings used at high speeds, i.e. above the recommended speed factor A given in **table 4**, **page 81**, only apply when using special greases or modified bearing executions, e.g. hybrid bearings. For higher speeds, continuous lubrication techniques such as circulating oil, oil mist etc, are more suitable than grease lubrication.

Cylindrical roller bearings

The relubrication intervals from **diagram 4**, **page 80**, are valid for cylindrical roller bearings fitted with:

- an injection moulded cage of fibre reinforced polyamide 66, designation suffix P
- a roller guided two-piece machined brass cage, designation suffix M

For bearings with a pressed steel cage (designation suffix J) or shoulder guided cages (designation suffixes MA, ML and MP), the value for the relubrication interval from **diagram 4**, **page 80** should be halved. Moreover, grease with good oil bleeding properties should be applied.

Observations

If the determined value for the relubrication interval t_f is too short for a newly designed application, SKF recommends the following:

- Check the calculated bearing temperature.
- Adopt measures to dissipate excess heat.
- Use a grease with higher temperature limit.

If field experience indicates that the relubrication interval t_f is too short:

- Check the operating bearing temperature and consider ways to dissipate excess heat or use a more suitable grease with higher temperature limit.
- Check the grease for contaminants.
- Check the bearing operating conditions, e.g. load or misalignment.

Last, but not least, a more suitable lubrication method (e.g. SKF automatic lubricators) should be considered.

Grease escape valve

When a bearing rotates at high speed and needs frequent relubrication, excessive grease can accumulate in the housing and cause temperature peaks, which will have a detrimental effect on the grease as well as on bearing service life. In these cases, it is advisable to use a grease escape valve. This prevents over-lubrication and allows relubrication to be performed while the machine is in operation. The typical valve consists of a disc rotating with the shaft, forming a narrow gap at the housing end cover.

Excess grease is collected by the disc, then discharged into a cavity in the end cover and ejected through an opening on the underside of the bearing housing. The grease valve principle is shown in **fig. 3** and **table 5** provides dimensional recommendations.

Grease escape valve

Fig. 3

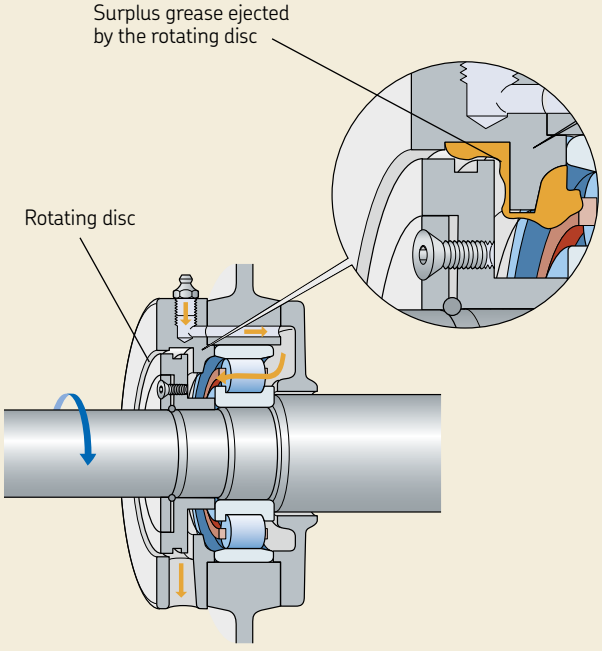

Table 5

Bearing housing with grease escape valve

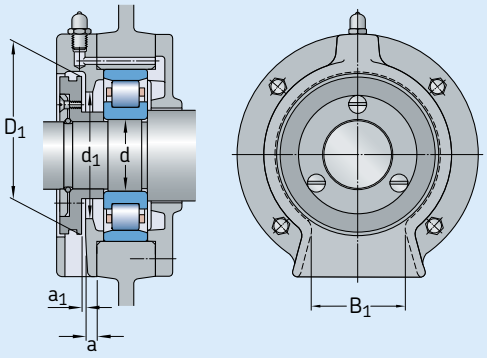

Bore diameter d		Dimensions				
Diameter series 2	3	d_1	D_1	B_1 min	a	a_1
mm		mm				
30	**25**	46	58	30	6 – 12	1,5
35	**30**	53	65	34	6 – 12	1,5
40	**35**	60	75	38	6 – 12	1,5
45	**40**	65	80	40	6 – 12	1,5
50	**45**	72	88	45	8 – 15	2
55	**50**	80	98	50	8 – 15	2
60	**55**	87	105	55	8 – 15	2
65	**60**	95	115	60	8 – 15	2
70	**–**	98	120	60	10 – 20	2
75	**65**	103	125	65	10 – 20	2
80	**70**	110	135	70	10 – 20	2
85	**75**	120	145	75	10 – 20	2
90	**80**	125	150	75	10 – 20	2
95	**85**	135	165	85	10 – 20	2
100	**90**	140	170	85	12 – 25	2,5
105	**95**	150	180	90	12 – 25	2,5
110	**100**	155	190	95	12 – 25	2,5
120	**105**	165	200	100	12 – 25	2,5
–	**110**	175	210	105	12 – 25	2,5
130	**–**	180	220	110	15 – 30	2,5
140	**120**	195	240	120	15 – 30	2,5
150	**130**	210	260	130	15 – 30	2,5
160	**140**	225	270	135	15 – 30	2,5
170	**150**	240	290	145	15 – 30	2,5
180	**160**	250	300	150	20 – 35	3
190	**170**	265	320	160	20 – 35	3
200	**180**	280	340	170	20 – 35	3
–	**190**	295	360	180	20 – 40	3
220	**200**	310	380	190	20 – 40	3
240	**220**	340	410	205	20 – 40	3
260	**240**	370	450	225	25 – 50	3
280	**260**	395	480	240	25 – 50	3
300	**280**	425	510	255	25 – 50	3

SKF SYSTEM 24 single point automatic lubricators

SKF SYSTEM 24 is an automatic lubricator yielding a constant grease flow that can be adjusted by setting a dial for required lubricant flow rate. It is specially designed to provide a reliable and cost-effective alternative to the traditional manual greasing method. SKF SYSTEM 24 is available in a gas driven (LAGD series) and an electro-mechanical (TLSD series) version (→ **fig. 4**).

Fig. 4



The automatic lubricator SKF SYSTEM 24 TLSD series

SKF MultiPoint Automatic Lubricators

LAGD 400 and LAGD 1000 are electromechanical devices that can feed up to 20 lines (→ **fig. 5a** and **5b**). They are also suitable for applications that need longer feed lines or higher feed pressures. Typical applications include large electric motors, pump and motor combinations or sets of these machines.

Fig. 5a



The automatic lubricator SKF MultiPoint LAGD 400

Automatic lubrication systems

The true potential of automatic lubrication is often overlooked for extending service intervals or securing reliability and availability of critical assets. Since lubrication is taking place automatically, the operator or service staff need not do anything manually.

SKF is the market leader of automatic and centralized system solutions for virtually any rotating equipment machinery application, plants, vehicles and off-road equipment.

SKF's deep knowledge of how to manage friction reduction and about tribology, support customers which are in the forefront with appropriate solutions.

Application examples: The SKF Monoflex and SKF Duoflex range of automatic single- or multi-line lubrication systems (→ **fig. 5c**). ensure oil, semi-fluid grease and hard grease lubrication of bearings in small, medium-sized to large machines like power generators, gears or cooling systems.

Fig. 5b



The automatic lubricator SKF MultiPoint LAGD 1000

Fig. 5c



SKF automatic grease pump

Grease life for capped bearings

The grease life for capped bearings is presented as L_{10}, i.e. the time period at the end of which 90% of the bearings are still reliably lubricated.

The method to estimate relubrication intervals (→ **page 80**) represents the L_{01} grease life and should not be used.

The grease life for capped bearings depends on the operating temperature and the speed factor. It can be obtained from the **diagram 5a**, **page 87**, which is valid for capped standard deep groove ball bearings. The grease performance factor (GPF) is listed in **table 7.**

Diagram 5b, **page 87** is valid for SKF Energy Efficient deep groove ball bearings.

The grease life is valid under the following operating conditions:

- horizontal shaft
- inner ring rotation
- light load (P ≤ 0,05 C)
- operating temperature within the green temperature zone of the grease (→ **diagram 3**, **page 76**)
- stationary machine
- low vibration levels

Moderate vibration does not have a negative effect on grease life. However, high vibration and shock levels, such as those in vibrating screen applications, cause the grease to churn. In these cases, grease life will be reduced.

If the operating conditions differ, the grease life obtained from the diagrams has to be adjusted:

- For vertical shafts, use 50% of the value from the diagram.
- For heavier loads (P > 0,05 C), use the reduction factor listed in **table 6**.

Grease performance factor

In **diagram 5a** and **5b** on **page 87**, a grease performance factor (GPF) is introduced as a way to take improved high speed, high temperature performance of the grease into account. The standard SKF grease for deep groove ball bearings has a GPF = 1.

In cases where the required grease life can not be achieved using standard SKF grease, an application specific SKF grease with a higher GPF can be used.

The grease life diagram gives the option to assess the life for application specific greases with GPF = 2 or GPF = 4, by using the corresponding temperature scales on the horizontal axis of **diagram 5a**, **page 87**. See **table 7** for grease performance factors of SKF deep groove ball bearings with factory fill.

It is important to note that grease performance factors are valid only for the specified temperature and speed ranges for that grease (→ **table 1**, **page 77**). Greases with GPF > 1 have an advantage at elevated temperatures, but might not release adequate amounts of oil at lower temperatures. For this reason, using the GPF outside the range of **diagram 5a** and **5b**, **page 87** is not recommended.

Table 6

Reduction factor for the grease life, depending on the load

Load P	Reduction factor
≤ 0,05 C	1,0
0,1 C	0,7
0,125 C	0,5
0,25 C	0,2

Note: Reduction factor for load P between here denoted values, has to be interpolated.

Table 7

Specification of grease performance factors for SKF bearings with factory fill

Factor	Grease suffixes	Maximum $n \times d_m$
GPF = 1	no suffix[1)]	500 000
GPF = 1	MT47, MT33	500 000
GPF = 1	LT	700 000
GPF = 2	GJN, LHT23, HT	500 000
GPF = 4	WT	700 000

[1)] Small bearings in the 8 and 9 Diameter Series with D < 30 mm are filled with LHT23 (GPF = 2) when d < 10 mm or LT10 when d > = 10 mm (GPF = 1)

Diagram 5a

Grease life for capped deep groove ball bearings
where P = 0,05 C

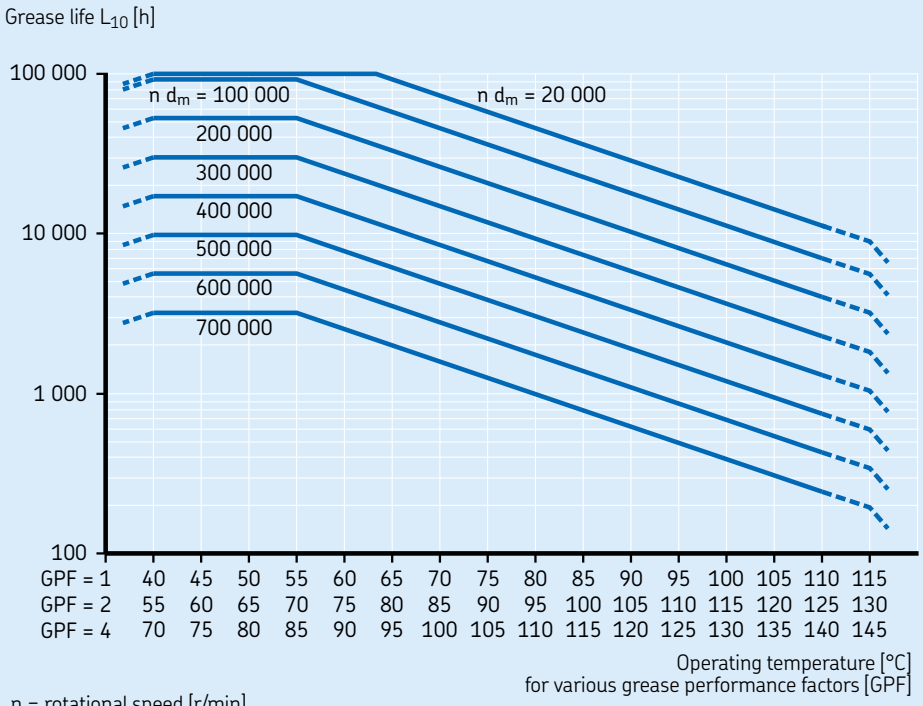

n = rotational speed [r/min]
d_m = bearing mean diameter [mm]
= 0,5 (d + D)

Diagram 5b

Grease life for SKF Energy Efficient deep groove ball bearings
where P = 0,05 C

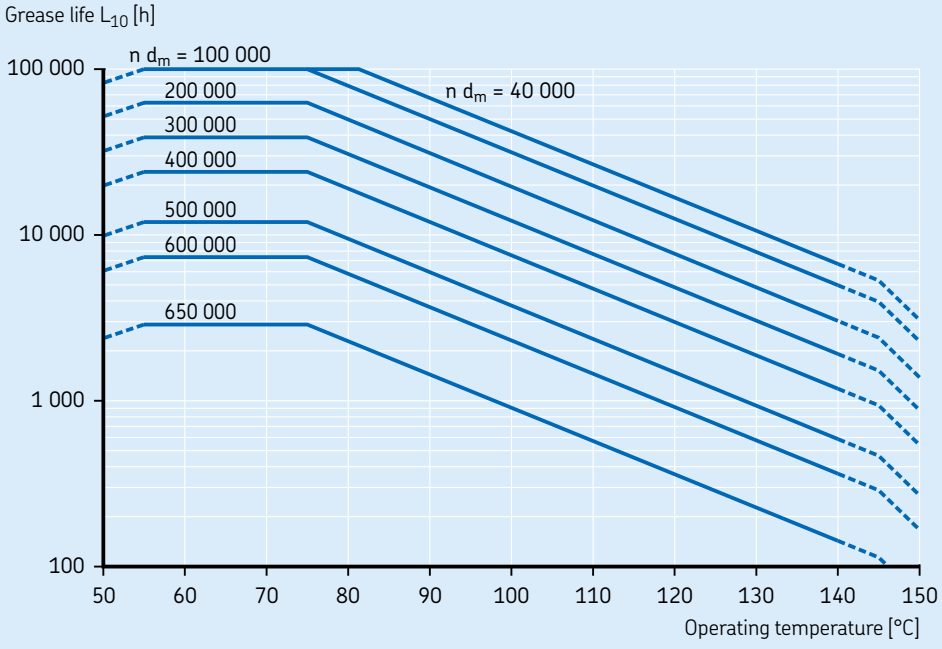

n = rotational speed [r/min]
d_m = bearing mean diameter [mm]
= 0,5 (d + D)

Oil lubrication

Oil is typically selected as a lubricant when rotational speeds or operating temperatures make it impractical or impossible to use grease. In applications where there are high operating temperatures, recirculating oil systems are used to dissipate heat. Recirculating systems can also be used to remove and filter out contaminants.

Oil lubrication requires more sophisticated seals, and if the proper seals are not selected and installed, there could be a risk of leakage.

In general only large electric motors and generators are oil lubricated.

Oil bath lubrication

The simplest method of oil lubrication is the oil bath (→ **fig. 6**, **page 91**).

The oil, which is picked up by the rotating components of the bearing, is distributed within the bearing and then flows back to the sump in the housing. The oil level should almost reach the centre of the lowest rolling element when the bearing is stationary. SKF recommends the use of oil levellers such as the SKF LAHD 500 to maintain the correct oil level.

When operating at high speed, the oil level can drop significantly and the housing can become overfilled by the oil leveller. If this occurs, contact the SKF application engineering service.

Circulating oil

High-speed operation increases the operating temperature and accelerates ageing of the oil. To avoid frequent oil changes and to achieve a fully flooded lubrication condition, the circulating oil lubrication method is generally preferred. Circulation is usually controlled by a pump. After the oil has passed through the bearing, it generally settles in a tank where it is filtered and, if required, cooled before being returned to the bearing. Proper filtering decreases the contamination level and extends bearing service life.

Selecting a lubricating oil

Oil selection is based primarily on the viscosity required to form a sufficiently thick hydrodynamic film at a normal operating temperature. The viscosity of oil is temperature dependent and the viscosity-temperature relationship of oil is characterized by the viscosity index (VI). For rolling bearings, oil having a high viscosity index of at least 95 are recommended.

In order to form a sufficiently thick oil film in the contact area between the rolling elements and raceways, the oil must retain a minimum viscosity at the normal operating temperature. The rated kinematical viscosity required at the normal operating temperature can be determined from **diagram 6**, **page 89**, provided that a mineral oil is used. When the operating temperature is known from experience or simulation, the corresponding viscosity at the internationally standardized reference temperature of 40 °C *(105 °F)* can be obtained from **diagram 7**, **page 89**, which is compiled for a viscosity index of 95.

Diagram 6

Estimation of the minimum kinematic viscosity ν_1 at operating temperature

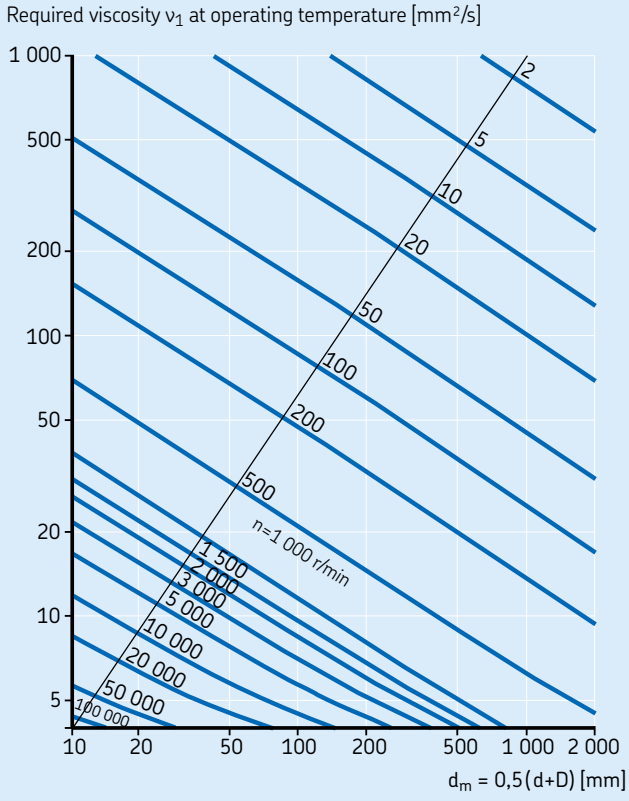

Diagram 7

Conversion to kinematic viscosity ν at the reference temperature (ISO VG classification)

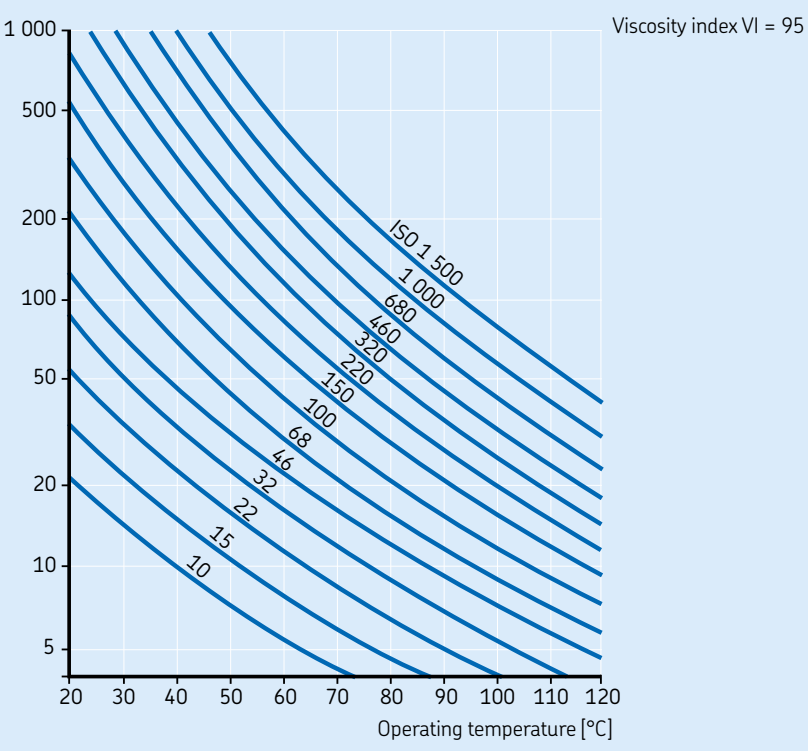

Additives

Chemicals, known as additives, are added to base oils to achieve or enhance certain performance characteristics. The additives are often grouped according to their function, e.g. performance, lubricant protective or surface protective.

Some common additives types are listed in **table 8**.

Oil change

The frequency with which it is necessary to change oil depends mainly on the oil lubrication system, the operating conditions and the quantity of oil. For all lubrication methods, oil analysis is recommended to help establish an appropriate oil change schedule.

Guideline values for oil change intervals are provided in **table 9**. In general, the more arduous the conditions, the more frequently the oil should be analysed and changed.

Table 8

Oil additives

Additive	Function
Anti-rust	Improves the protection of the bearing surfaces offered by oil (water or oil soluble)
Anti-oxidant	Delays the breakdown of the base oil at high temperatures, extending lubricant life
Anti-foaming	Prevents bubble formation
Extreme pressure (EP)	Reduces the damaging effects of metal-to-metal contact
Anti-wear (AW)	Prevents metal-to-metal contact
Solid additive	Provides lubrication when the base oil becomes ineffective

Table 9

Oil change intervals

Oil lubrication system	Typical operating conditions	Approximate oil change interval [1]
Oil bath	Operating temperature < 50 °C *(120 °F)* Little risk of contamination	12 months
	Operating temperature 50 to 100 °C *(120 to 210 °F)* Some contamination	3 to 12 months
	Operating temperature > 100 °C *(210 °F)* Contaminated environment	3 months
Circulating oil or oil jet	All	Determined by test runs and regular inspection of the oil condition. Dependent on how frequently the total oil quantity is circulated and whether or not the oil is cooled.

[1] More frequent oil changes are needed if the operating conditions are more demanding.

SKF flanged housing units – AFC series, with oil bath lubrication

For large electric machines, SKF has developed a range of flanged housing units (→ *Large and very large electric machines*, **page 131**) equipped with rolling bearings (→ **fig. 6**,). Oil bath lubrication is applied and, if needed, the housing can be equipped with an oil leveller to maintain the correct oil level in the bearings.

Fig. 6

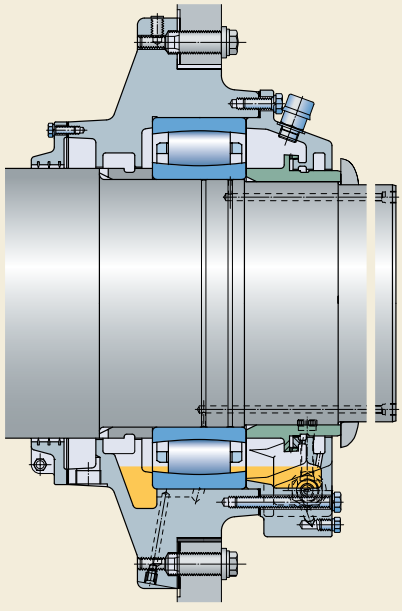

An SKF flanged housing unit with a CARB toroidal roller bearing

6 Bearing mounting, dismounting and motor testing

Mounting 94

Mounting methods 96

Dismounting 101

Motor testing and preparing for transport 105



Bearing mounting, dismounting and motor testing

Rolling bearings are precision products that must be handled carefully during mounting if they are to perform properly. As a result, a full understanding of mounting and dismounting techniques is as important for a motor designer as it is for maintenance personnel.

Various factors, including incorrect mounting procedures, a dirty work environment, and contaminated grease or oil, can all cause a bearing to fail prematurely.

To facilitate motor repairs, the design engineer should pay special attention to the dismounting of rolling bearings. Using the correct tools and procedures not only minimizes the negative impact on adjacent components, but properly dismounted bearings also can be the starting point for a root cause failure analysis – a crucial step toward reducing a motor's total cost of ownership.

Best practices during mounting and motor assembly is the basic prerequisite for a successful test of the motor's electrical and mechanical properties.

Mounting

Rolling bearings are reliable machine components that can provide long service life if they are mounted and maintained properly.

Proper mounting requires experience, accuracy, a clean work environment and the appropriate tools.

The information provided in the following section is quite general and is intended primarily to indicate what must be considered by machine and equipment designers in order to facilitate bearing mounting and dismounting. It also provides basic information for the person actually mounting the bearing.

For additional information about mounting and dismounting procedures, refer to the *SKF Bearing Maintenance Handbook* available online via skf.com.

Where to mount

Bearings should be mounted in a dry, clean and dust free area away from machines producing swarf and dust. When bearings have to be mounted in an unprotected area, steps should be taken to protect the bearing and mounting position from contaminants like dust, dirt and moisture. This can be done by covering or wrapping bearings, machine components, etc. with plastic or foil (→ **fig. 1**).

Preparations prior to mounting or dismounting

Prior to mounting, be sure all the necessary parts, tools, equipment and data are readily available. It is also advisable to review any drawings or instructions to determine the correct order and direction that components are to be assembled.

Checking associated components

Housings, shafts, seals and other components of the bearing system should be checked to make sure that they are clean. This is particularly important for threaded holes, lead-ins or grooves where remnants of previous machining operations might have collected. Also, be sure that all unpainted surfaces of cast housings are free of core sand and that any burrs are removed.

Be sure that the shaft and housing seats are within specification regarding dimensional and form tolerances (→ **chapter 4**, **page 65**).

The diameters of cylindrical shaft and housing seats are usually checked with a micrometer or internal gauge at two cross-sections and in four directions (→ **fig. 2**, **page 95**).

It is advisable to record the measurement values of the shaft and bore diameters for future reference in a measurement report form. When measuring, it is important that the components and the measuring instruments are approximately the same temperature.

The work area should be kept clean

Fig. 1

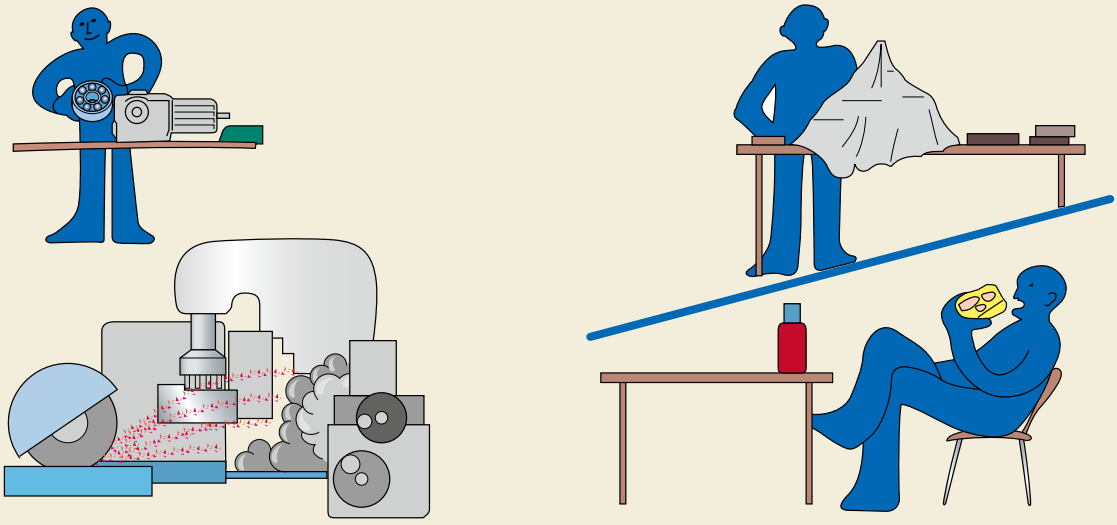

If the mounting process is discontinued for any reason, the bearing should be protected immediately so that dust and dirt can not enter the bearing cavity (→ **fig. 1**, **page 94**).

Handling bearings

New SKF bearings are well protected in their package and should not be removed from the package until immediately before mounting.

All surfaces of a new bearing are covered with a rust-inhibiting preservative that should not be removed unless it is incompatible with the grease or oil being used. Just before mounting, wipe off the preservative from the bore and outside diameter of the bearing. If the preservative is not compatible with the lubricant, wash and carefully dry the bearing.

Bearings capped with seals or shields are filled with grease and should not be washed prior to mounting.

SKF recommends using gloves as well as carrying and lifting tools that have been specially designed for handling heavier bearings. Using the proper tools enhances safety while saving time and effort. When handling hot or oily bearings, SKF recommends wearing the appropriate heat-resistant or oil-resistant gloves.

Important

SKF does not recommend mounting a previously mounted bearing.

Measuring the bearing seats

Fig. 2

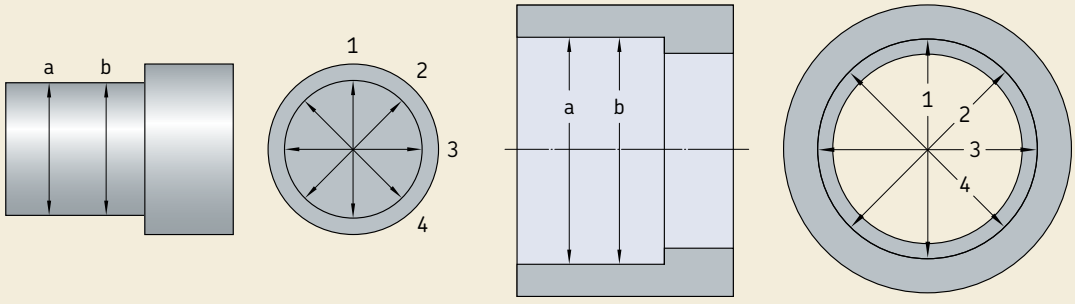

	a	b
1		
2		
3		
4		

	a	b
1		
2		
3		
4		

Mounting methods

Depending on the bearing type and size, mechanical, thermal or hydraulic methods are used for mounting.

In all cases, it is important that the bearing rings, cages and rolling elements or seals are never struck directly with a hard object and that the mounting force is never applied through the rolling elements. For an interference fit, the mating surfaces should be coated with a thin layer of light oil. For a loose fit, the mating surfaces should be coated with SKF anti-fretting agent.

Cold mounting

Bearings up to approximately 100 mm bore diameter can be mounted onto a shaft without heat. Mounting a bearing cold is not difficult and will not have an effect on bearing service life provided it is installed properly with the correct tools.

Appropriate method

To cold mount a bearing, apply a thin film of light oil to the bearing seat. Then gently position the bearing so that it lines up with its counterpart. Position the mounting tool and apply the mounting force to the bearing ring being mounted with an interference fit (→ **fig. 3**).

Applying the mounting force to only the other ring, will transfer the mounting force via the rolling elements, and damage the bearing (→ **chapter 7**, **page 109**), which will eventually lead to premature bearing failure.

The right method for cold mounting bearings with an interference fit

Fig. 3

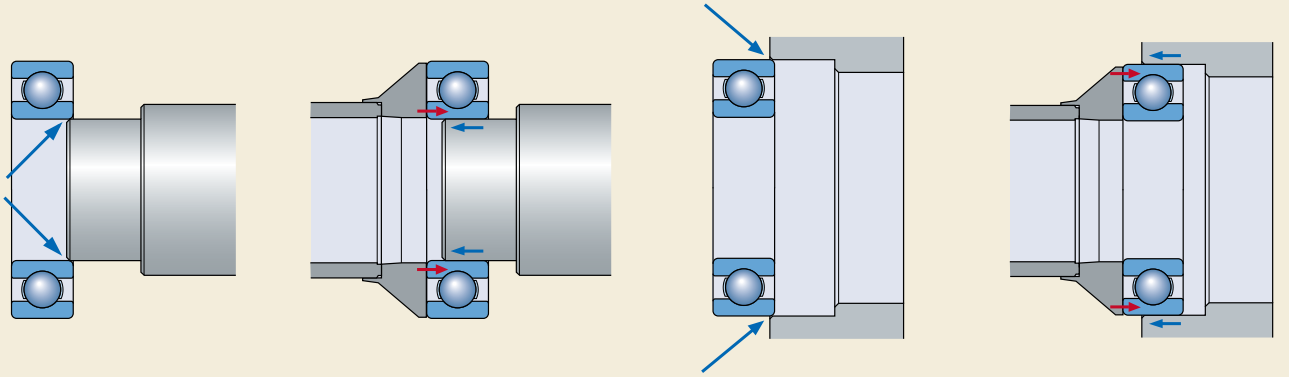

Mounting a bearing with an interference fit on the inner ring.

Mounting a bearing with an interference fit on the outer ring.

Appropriate tools

Small bearings with a bore diameter up to approximately 50 mm, can best be cold mounted by using the SKF TMFT fitting tools (→ **figs. 4** and **5**).

Medium size bearings with a bore diameter less than 100 mm are usually cold mounted with a mechanical or hydraulic press. To do this, a sleeve must be placed between the press and the bearing ring being mounted with an interference fit (→ **fig. 6**).

Hot mounting

The force needed to mount a bearing increases rapidly with bearing size. Larger bearings cannot be pressed easily onto a shaft or into a housing because of the mounting force required. Therefore, if there is an interference fit between the bearing and shaft, the bearing should be heated. If the interference fit is between the bearing and housing, the housing should be heated.

The requisite temperature difference between the bearing and its seat depends on the magnitude of the interference fit and the bearing size. Normally, a bearing temperature of 80 to 90 °C (*175* to *195 °F*) higher than that of the shaft is sufficient for mounting.

Open bearings must not be heated to more than 120 °C (*250 °F*). SKF does not recommend heating bearings capped with seals or shields above 80 °C (*175 °F*). However, if higher temperatures are necessary, make sure that the temperature does not exceed the permissible temperature of either the seal or grease, whichever is lowest. If that lowest permissible temperature is not high enough to reach the requisite temperature difference, you need to cool the shaft.

Never heat a bearing to a temperature greater than 120 °C (*250 °F*). Overheating may alter the bearing's metallurgical and dimensional properties. Local overheating must be avoided.

Wear clean protective gloves when mounting a heated bearing. Lifting (hoisting) gear can facilitate mounting. Push the bearing onto the shaft or into the housing until it is pressed firmly against the abutment. Hold the bearing in place against the abutment until the heated parts cool and form a tight fit.

Fig. 4



Appropriate tools for cold mounting – the SKF TMFT series fitting tools, figs. 4 and 5

Fig. 5



Fig. 6

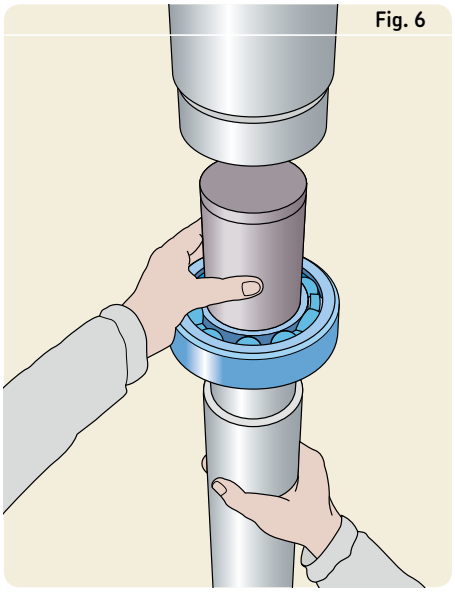

Cold mounting with a press

Appropriate tools

SKF has a full line of heating tools, such as electric hot plates and induction heaters. An electric hot plate (→ **fig. 7**), with adjustable thermostat and cover, is used for smaller size bearings. An induction heater (→ **fig. 8**) is used for medium and larger size bearings. Induction heaters, which are generally equipped with adjustable thermostats and automatic demagnetization, are extremely easy to use.

When an interference fit is required between the bearing and housing, a moderate increase in housing temperature is required. In most cases, a temperature increase of 20 to 50 °C (*70* to *120 °F*) is sufficient because the interference fit is usually light. Another option is to cool the bearing before it is mounted into the housing.

Important:

- Do not heat a bearing using an open flame.
- Sealed bearings (contact seals or shields) should not be heated over 80 °C (*175 °F*) because of their grease fill and because damage to the seal material could result.

Fig. 7 *Electric hot plate*



Fig. 8 *Induction heater*



Mounting of non-separable bearings

Fig. 9

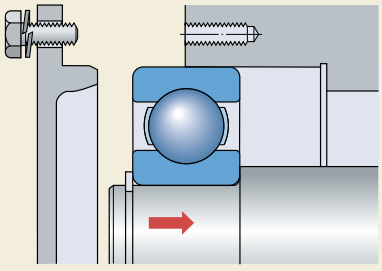

a

Non–separable bearings with an interference fit on the inner ring are first mounted on the shaft. The bearing/shaft assembly is then carefully installed in the housing or housing shield.

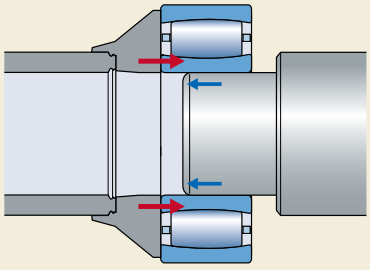

b

When mounting a CARB toroidal roller bearing onto a shaft with an interference fit, both rings should be supported.

Additional consideration

There are several aspects to consider when mounting bearings. Some of the more basic ones are listed below:

- Keep the bearing clean.
- Handle the bearing with care.
- Make sure that the bearing is mounted at a right angle onto the shaft/into the housing.
- Apply the mounting force to the appropriate ring.

Non-separable bearings

The non-separable bearings typically used in electric motors are deep groove ball bearings, single row angular contact ball bearings, CARB toroidal roller bearings and spherical roller bearings.

When an interference fit is required for the inner ring, first mount the bearing onto the shaft. Then carefully assemble the housing and bearing and shaft assembly (→ **fig. 9a, page 98**).

INSOCOAT and hybrid bearings are mounted in the same manner as standard bearings.

Due to the design of CARB toroidal roller bearings, the rings and roller complement may be displaced axially from their normal position during handling. Therefore, SKF recommends mounting CARB bearings when the shaft or housing is in the horizontal position. Also, whenever possible, rotate the inner or outer ring to align the rollers during mounting. When a CARB toroidal roller bearing is mounted with an interference fit on a shaft, use a tool that will support both the inner and outer rings (→ **fig. 9b**, **page 98**).

Separable bearings

Cylindrical roller bearings are separable radial bearings used in electric motors (→ **fig. 10**). Because these bearings are typically mounted with an interference fit on both the shaft and in the housing, the rings are usually mounted separately.

The rollers in a single row cylindrical roller bearing are axially guided between integral flanges on one of the bearing rings. The flanged ring and the roller and cage assembly form a unit that can be separated from the other ring. This separable feature facilitates mounting. Mount the separable ring first. When mounting the inner ring of a cylindrical roller bearing, an induction heater might be necessary. The outer ring is usually just pressed into the housing.

Apply lubricant to the cage and roller assembly. Make sure the lubricant also reaches the raceway. Also apply a thin layer of lubricant to the raceway of the other ring.

When assembling, make sure that the roller assembly is not at an angle to the other ring. If either part of the bearing is assembled at an angle, it is easy to damage a ring or rollers, especially if the rollers or raceways are not lubricated. To avoid this kind of problem, it is recommended that a guide sleeve be used (→ **fig. 10**). To help prevent the rollers from scratching the raceway of the other ring, the rings should be rotated relative to each other as the bearing is being assembled.

Mounting of separable bearings

Fig. 10

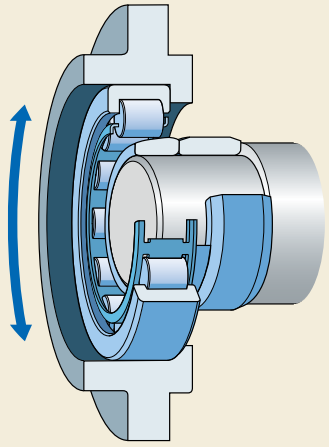

Oil the raceway and rollers. Use a guiding sleeve. During assembly, rotate the rings relative to each other.

Checking the alignment

Misalignment between the shaft and housing should be avoided to achieve maximum service life on rolling bearings commonly used in electric machines, such as deep groove ball bearings, angular contact ball bearings and cylindrical roller bearings.

For large bearings, the alignment between the inner and outer rings can be checked with the tool shown in **fig. 11**, after the bearing and shaft assembly have been properly installed in the housing. The tool consists of a dial indicator mounted on a steel segment.

The steel segment has two set screws for height adjustment and to provide two solid contact points with the shaft. The steel segment is pressed against the side face of the inner ring and the shaft. The gauge is directed against the side surface of the bearing outer ring.

To obtain a value for misalignment, first determine the maximum deviation d_x by measuring the two points with highest values on the outer ring side face that are 180 degrees apart. The misalignment angle can then be calculated from

$$\beta = 3\,438\, d_x/D$$

where

β = misalignment angle, minutes of arc
d_x = maximum deviation [mm]
D = bearing outside diameter [mm]

The permissible angular misalignment between the inner and outer rings of a bearing depends on the size and internal design of the bearing, the radial internal clearance in operation and the forces and moments acting on the bearing. Any misalignment increases bearing noise and reduces bearing service life.

The maximum allowable value for the angle of misalignment β for the bearing in question is mentioned in the *SKF Rolling Bearings Catalogue*.

Lubricating the bearings

Grease lubricated open bearings should be greased after they have been mounted onto the rotor (→ **fig. 12**):

- For cylindrical roller bearings, the interior space of the cage and roller assembly should be filled immediately after it is mounted. Grease is also applied to the raceway of the free ring immediately after it has been installed on the shaft. Only then should the bearing be assembled.
- Non-separable bearings, due to lack of space, are filled with grease from the front. Use an SKF grease packer, for example, and check that the grease has penetrated through the bearing, to be sure that the bearing cavity is completely filled.
- Do not fill all the free space in the housing. The grease fill should not exceed 30–50% of the free space.
- Make sure that the grease is free from contaminants.
- For oil lubricated bearings, fill the housing with fresh, clean oil to the required level.

Tool for checking alignment

Fig. 11

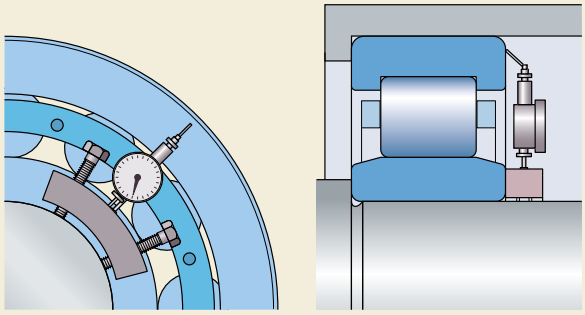

Greasing bearings

Fig. 12



More information about mounting

General information about mounting bearings can be found in the *SKF Rolling Bearings Catalogue* or online via skf.com. Further information can also be found in the *SKF Bearing Maintenance Handbook*. Information about mounting a specific type of bearing can be obtained online at skf.com/mount.

Dismounting

A number of points need to be observed when dismounting bearings:

1. Study assembly drawings to determine the bearing arrangement and make sure the proper dismounting tools are available.
2. Review the paper work to determine the cause of the repair.
3. Before initiating the dismounting procedure, inspect the motor for signs of damage, e.g. leaks, arcing, broken fins.
4. Clean the exterior of the motor and make sure the work area is clean.
5. Disassemble the motor without dismounting the bearings at this stage.
6. Inspect the bearings and seals looking for wear and damage.
   Important
   Dismounting undamaged bearings should be avoided if possible, as improper dismounting could cause internal bearing damage. SKF does not recommend mounting a previously mounted bearing.
7. Even if a bearing is to be replaced, dismounting should be done with care, to avoid damaging the bearing and adjacent components. Before dismounting, mark the bearing's orientation and position relative to the shaft and housing. This information will be helpful in the bearing analysis later on.
8. After dismounting, examine the bearing to determine the root cause of damage and take corrective action to avoid a reoccurrence (→ **chapter 7**, **page 109**).

Dismounting methods

To dismount a bearing, apply the dismounting force to the ring that needs to be removed, i.e. the ring with a tight fit.

For bearings in electric motors, there are four dismounting methods:

- using a mechanical puller
- using a hydraulic puller
- using a press
- using heat

The appropriate method may depend on the bearing size. If the bearing is relatively small, a bearing puller can be used. However, medium and large size bearings may require a hydraulic puller.

Using heat is appropriate when removing the inner ring of cylindrical roller bearings (→ **fig. 22** and **23**, **page 104**).

Dismounting tools

Choosing appropriate tools for dismounting is crucial. For successful dismounting, the most suitable tool for each individual case should be used.

Mechanical pullers

Small and medium-size bearings mounted with an interference fit on the shaft can be dismounted using a conventional puller (→ **fig. 13**, **page 103**). Using self-centring pullers will virtually eliminate the risk of damaging the bearing and/or bearing seat from applying uneven pressure during removal. Therefore, for safe and easy dismounting, SKF recommends using a puller in the TMMA series. They are self-centring and the unique spring operated arms facilitate the dismounting operation (→ **fig. 14**, **page 103**).

If possible, let the puller engage the inner ring. This is facilitated if the shaft is provided with notches to engage the puller (→ **fig. 15**, **page 103**). Remove the bearing with a steady pulling force until the bearing has been completely removed from its seat.

In applications where the inner ring is not accessible with normal jaw pullers, the bearing can be removed with a strong back puller (→ **fig. 18**, **page 103**). Keep in mind however, that a strong back puller requires a certain amount of free space behind the bearing.

If it is not possible to apply force through the inner ring, the bearing can be removed via the outer ring. If the bearing is to be analysed afterwards, or if there are other reasons to minimize bearing damage, the outer ring should be rotated during dismounting (→ **fig. 17**, **page 103**). This can be done by locking the screw and producing the pulling force by continuously turning the puller until the bearing comes free.

Sometimes it is difficult to remove the outer ring from the housing due to fretting corrosion or housing deformation. In these cases, dismounting is facilitated if the housing is provided with tapped holes as shown in **fig. 16**, **page 103**.

Sometimes, neither the inner ring nor the outer ring is accessible. In these cases, special internal bearing pullers can be used, such as an SKF TMMD 100 deep groove ball bearing puller (→ **fig. 19**, **page 103**), an SKF TMIP internal puller or an SKF TMBP20E blind housing puller.

Hydraulic pullers

The force needed to dismount bearings having an interference fit on the shaft increases rapidly with the bearing size. To facilitate dismounting, hydraulic tools can be used for medium and large size bearings (→ **fig. 20**, **page 103**).

Using a puller with an integrated hydraulic cylinder and pump further facilitates the dismounting process.

WARNING!
It is dangerous to stand directly behind a hydraulic puller. When the bearing comes loose, the puller can suddenly move backwards. Therefore, it is safer to stand to one side.

Standard jaw puller

Fig. 13



Fig. 14



Mechanical jaw puller with spring operated arms

Notches in the shaft facilitate dismounting

Fig. 15

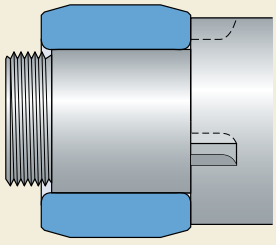

Fig. 16

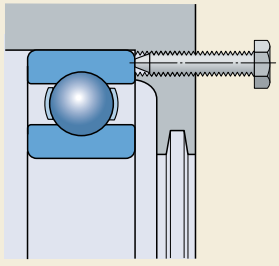

Tapped holes in the housing facilitate dismounting of the outer ring

Minimize damage by rotating the outer ring

Fig. 17



Fig. 18



Strong back puller

SKF deep groove ball bearing puller

Fig. 19



Fig. 20



SKF hydraulic puller

Presses

A convenient way to remove a bearing from the rotor shaft seat is by using a press (→ **fig. 21**). Make sure, however, that only the bearing inner ring – having the interference fit – is supported.

Heaters

The inner ring of a cylindrical roller bearing is often removed using heat. To do this, SKF has developed a number of special tools including aluminium rings that are available for bearings in the NU, NJ and NUP series (→ **fig. 22**).

The dismounting method is simple. Remove the outer ring and coat the inner ring raceway with a thick oxidation-resistant oil. Place the heating ring, pre-heated to about 280 °C (*535 °F*), around the inner ring and press the handles together. When the inner ring starts loosening, withdraw it from the shaft.

If you frequently dismount inner rings of various diameters, an SKF adjustable induction heater may be more convenient (→ **fig. 23**).

Dismounting large bearings

To dismount large bearings, normally the same methods can be applied as for smaller bearings.

However, the use of the oil injection method considerably facilitates dismounting. This assumes that the necessary oil supply ducts and distributor grooves have been designed into the arrangement. Furthermore, hydraulically-assisted heavy-duty jaw pullers are available, providing withdrawal forces up to 500 kN.

Further Information about mounting and dismounting of bearings can be found in the *SKF Rolling Bearings Catalogue*, the *SKF Bearing Maintenance Handbook* and online at skf.com/mount.

Fig. 21

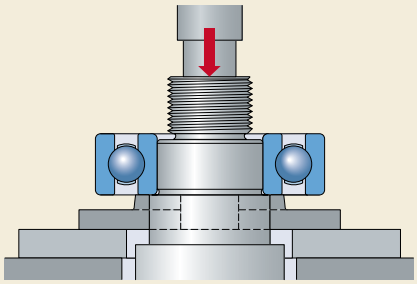

Removing the bearing using a press

Fig. 22

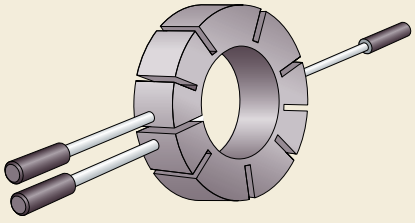

Aluminium heating ring

Fig. 23



SKF adjustable induction heater

Motor testing and preparing for transport

Motor testing

After assembly, the motor should be tested for compliance with required electrical and mechanical specifications.

Preparation for tests

In general, motors require an external load (→ **fig. 24**) applied to the shaft to avoid potential rolling bearing damage due to insufficient loads. Only electric motors with a spring preloaded deep groove ball bearing arrangement (see *Minimum load requirements* in **chapter 2**, **page 50**) can run without an external load applied to the shaft.

Testing motor insulation and electrical circuit quality

The motor should be tested for any weaknesses in winding or ground wall insulation and also to validate circuit integrity, rotor bar health and the motor's ability to produce the rated torque. SKF Static Motor Analyzers (→ **fig. 25**) use surge, polarization index, DC step-voltage, megohm [MΩ] and winding resistance tests to discern any insulation weaknesses that could cause the motor to fail prematurely. SKF Dynamic Motor Analyzers (→ **fig. 26**), can be used to prove the motor meets its torque rating, assess rotor bar health and detect any current imbalance that would reveal a compromise to circuit integrity.

Fig. 24



Test rig for the motor

Fig. 25

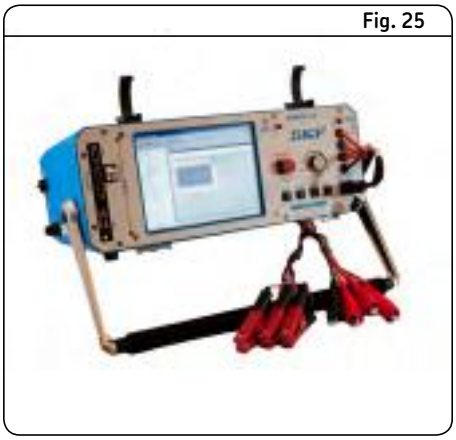

SKF Static Motor Analyzer – Baker AWA-IV

Fig. 26



SKF Dynamic Motor Analyzer – EXP4000

Testing mechanical properties

To make a final check of the motor assembly and to check the vibration levels in particular, SKF recommends using SKF condition monitoring equipment (→ **fig. 27**).

Further information about testing of electric motors can be found online via skf.com.

Preparing for transport

Before transporting a motor, the shaft should be locked, so that the bearings are unable to move axially or radially. (→ **fig. 28**). These precautions are necessary to prevent false brinelling damage to the raceways (→ **chapter 7**, *False brinelling*, **page 115**).

Thoroughly wrap the motor for protection during transport (→ **fig. 29**).

Fig. 27



Vibration levels can be checked with SKF condition monitoring equipment

Fig. 28



Lock the shaft and the bearings before transport

Fig. 29



Wrap the motor

7 Bearing damage and corrective actions

Bearing damage 110

Root cause analysis 110

Fatigue 111

Wear 112

Corrosion 114

Electrical erosion 116

Plastic deformation 121

Fracture and cracking 122



Bearing damage and corrective actions

Bearings are key components of electric motors and must therefore meet exacting performance criteria in terms of load carrying capacity, speed and reliability.

Today, SKF has the means to calculate rating bearing life, based on raceway fatigue, with considerable accuracy by considering the effects of load, speed and lubrication in terms of viscosity ratios and solid contamination. This makes it possible to estimate potential bearing life in terms of fatigue.

The actual life of an individual bearing is, however, related to many influencing factors and failure modes, other than fatigue. These may, for instance, include abrasive wear, moisture contamination, corrosion, improper installation, improper shaft/housing fits, skidding of rolling elements, unforeseen contamination. They could also be related to failure of the cage or either of the sealing or lubrication systems. Electrical erosion, by excessive voltage or current leakage, is another cause of failure to be found in electric machine applications.

Bearings in electric motors can fail prematurely for a number of different reasons. As well as the causes mentioned above, the premature failure can also be due to damage during transport or standstill, mounting problems or improper handling.

Each of these mentioned causes produces its own particular type of damage and leaves its own special imprint on the bearing.

Consequently, by examining a damaged bearing, it is possible in the majority of cases to determine the root cause of the damage so that appropriate actions can be taken to prevent a recurrence.

Bearing damage

In theory, it would be an advantage to classify bearing damage based on the primary root cause of the failure. In practice, however, there is often an overlay of different failure causes, which, when combined can lead to significant bearing damage such as:

- excessive wear (e.g. caused by contaminated lubricant) because of inadequate sealing performance
- early fatigue (e.g. small spalls) which can end up as large spalling and cause severe motor failures in operation (e.g. cracked rings and/or rolling elements)

Because of the possibility that there are multiple causes of the failure, bearing damage investigation can be quite complex and difficult.

Root cause analysis

It is commonly understood that:

- A cause of damage (failure) results in a certain characteristic form of change.
- A certain failure mechanism results in a certain failure mode (pattern).
- From the damage observed, one can possibly determine the root cause of failure.

Much work has been done by ISO to define the different failure modes and to classify them. This has resulted in the ISO 15243 standard (→ **diagram 1**), first published in 2004. When looking at bearing failures, a total of six main failure modes can be observed, which can be further classified into a number of sub modes.

Diagram 1

ISO 15243: Bearing damage classification – showing 6 primary failure modes and their sub-modes.

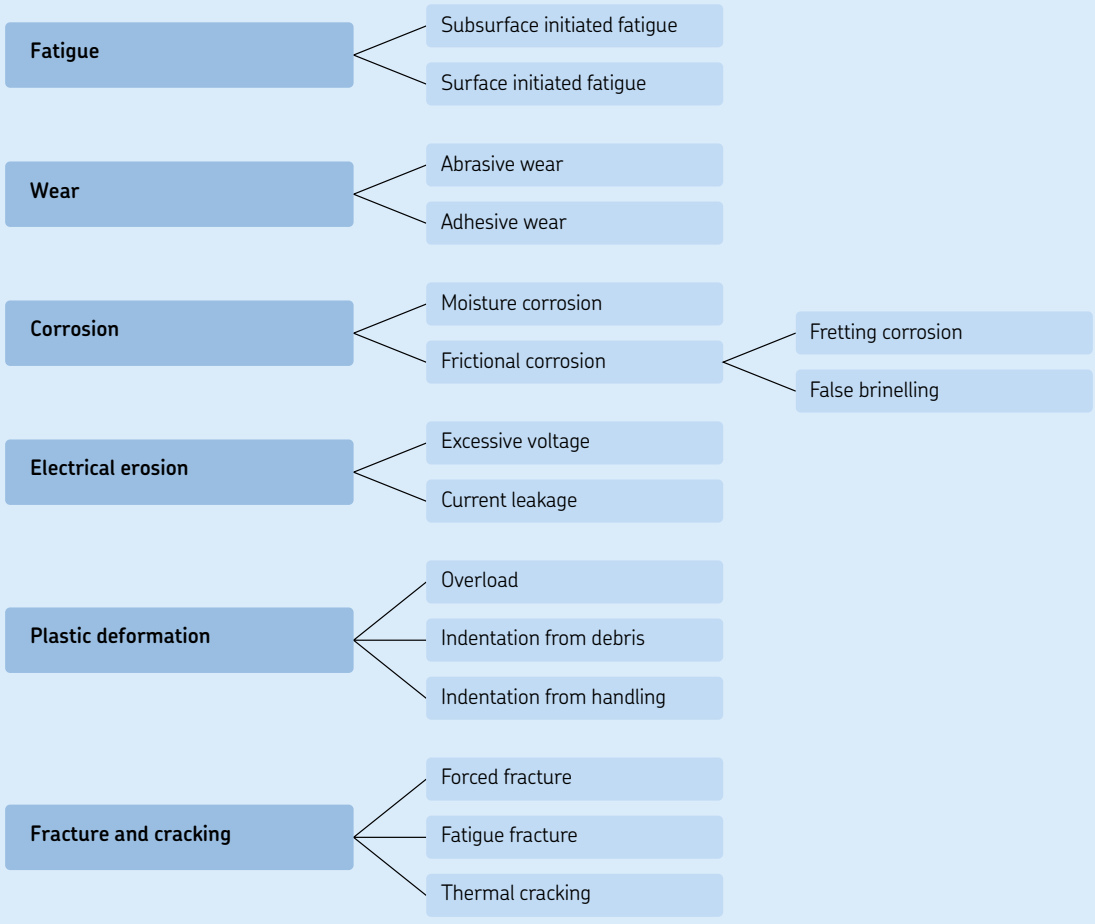

The classification is based on three major factors:

- damage and changes that occurred during service (as soon as a bearing has left the factory)
- characteristic forms of change in appearance that can be attributed to a particular cause
- classified by visible features (including the use of non-destructive equipment for magnifying, such as microscopes)

Fatigue

Subsurface initiated fatigue

The deterioration of the material is caused by cyclic loading and the built-up of stresses just underneath the raceway surface, ultimately resulting in decay of the material. Cracks are initiated and propagate underneath the surface, and when they come to the surface, spalling occurs (→ **fig. 1**).

Surface initiated fatigue

This results from inadequate lubrication conditions. The role of the lubricant is to build up an oil film that separates the moving parts. Under poor lubrication conditions, for example due to contamination or inadequate viscosity, metal-to-metal contact occurs. The surface asperities (peaks) shear over each other, resulting in stresses that lead to material fatigue, and finally resulting in microspalls. Initially, there might be a shiny surface, because the surface roughness is reduced, but the process continues and the surface becomes dull and breaks up.

Corrective Actions (against surface fatigue)

Subsurface fatigue was an important failure mode in the past. With the present improvements in bearing steel manufacture, however, it has been found that fatigue failures initiate more often from surface damage rather than from cracks formed beneath the surface.

To avoid surface fatigue – take special care to select an adequate viscosity of the lubricant considering the operating temperature and speeds, and take appropriate precautions to assure that any contamination or pollution is kept outside the bearing cavity.

Spalling caused by fatigue

Fig. 1

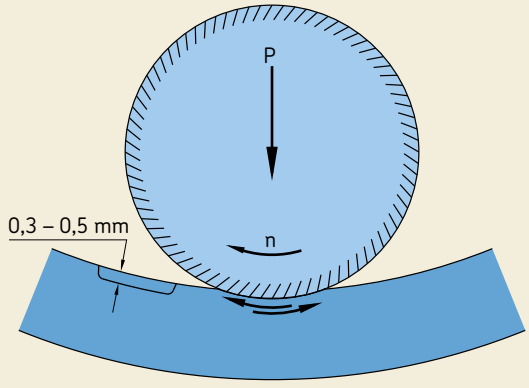



Subsurface initiated fatigue on an angular contact ball bearing outer ring raceway



Surface initiated fatigue on the inner ring raceway of a tapered roller bearing

Wear

Wear is typical damage that occurs in the contact zones of moving bodies. Wear most often is unavoidable. However, circumstances may cause wear to occur at an early stage of bearing operation. Two variants of wear can occur. These are abrasive (→ **fig. 2**) and adhesive (→ **fig. 3**) wear. They occur due to differences in the speed of the working contact surfaces. The cause of the speed differences can be kinematic slip, acceleration and/or deceleration.

Abrasive wear

This occurs due to abrasive particles in the lubricant. These can be contaminant particles coming from the outside or inside. The abrasive particles wear out the surfaces of the raceways, rolling elements and also metal cages. This normally results in dull surfaces.

However, if the abrasive particles are very fine and hard, such as cement dust, a polishing effect might occur and mirror-like surfaces appear. Often, inadequate (or the absence of) sealing arrangements result in contaminants entering the bearing cavity.

A lubricant analysis might reveal the origin of the contamination, which can help in finding a solution for the problem.

Adhesive wear

Adhesive wear occurs mainly in contact surfaces subjected to light loads, poor lubrication conditions and with important speed differences, resulting in sliding of the rolling elements.

One example is the passage of rolling elements from the unloaded zone into the loaded zone. The rolling elements can lose speed in the unloaded zone and accelerate when returning to the loaded zone. This can result in break-through of the lubrication film, sliding, heat development and possibly material transfer from the rolling element to the raceway or vice versa. In an early stage, the appearance is shiny surfaces, but quickly it turns into a dull surface with (more or less) smeared material.

Fig. 2

Abrasive wear. Polishing wear causes mirror-like surfaces

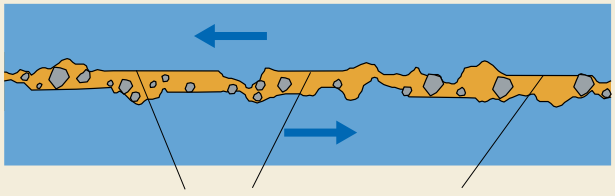

Flat surfaces due to polishing and plastic deformation of the surface asperities



Outer ring raceways of spherical roller bearing showing abrasive wear

Fig. 3

Adhesive wear. Important speed differences and too light loads can cause sliding, resulting in very high temperatures and smearing

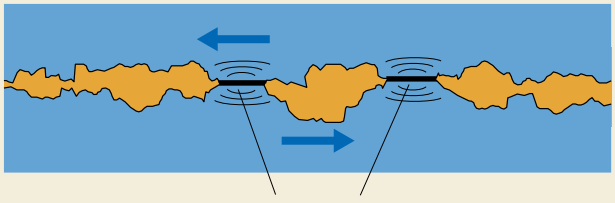

Welded material



Adhesive wear on the inner ring raceway of a cylindrical roller bearing

Corrective action (against abrasive wear)

Check first whether the appropriate lubricant is being used and that re-greasing interval and quantity are adequate for the application. If the lubricant contains contaminants, check the seals to determine if they should be replaced or upgraded. In some cases, depending on the application, a lubricant with a higher viscosity may be needed to increase the viscosity ratio.

Corrective action (against adhesive wear)

Select the right bearing type and bearing size to avoid conditions where the minimum load requirements for the bearings are not fulfilled. Consider that the direction of magnetic pull between rotor and stator in industrial electric motors can act against the gravity of the rotor.

Make sure to apply a sufficiently large external load to the bearings. It is most important to remember this when using roller bearings, since they are typically used to accommodate heavier loads.

Apply external loads on the rotor shaft during motor test procedures – bearing pre-damage by smearing can also be avoided (→ **chapter 6**, **fig. 24** on **page 105**).

Corrosion

Moisture corrosion

In contrast to other damage processes, corrosion can occur quickly and penetrate deeply into the material. This can cause serious bearing damage. Corrosion occurs in the presence of water, corrosive liquids or moisture. Also, high humidity in the air and touching raceways with fingers can lead to this type of corrosion. It is therefore important to have good protection. Corrosion often happens during standstill and is then visible by corrosion marks at rolling element distance. Deep-seated rust leads to early bearing damage.

Fretting corrosion

The root cause is micro-movements between two loaded surfaces. Mostly, this frictional corrosion occurs between the bearing outside diameter and housing and/or between the bearing bore and shaft. The micro-movements are mainly caused by the cyclic loads when rolling elements are passing by. Inadequate fit, shaft bending and/or imperfections in the contact surfaces can be the cause and/or accelerate the occurrence. Air can touch the unprotected surfaces, and accelerate the progression of corrosion. The formed iron oxide has a larger volume than pure steel. This can develop material growth and high stresses, even to the bearing raceway and can lead to premature fatigue. Fretting corrosion can easily lead to ring cracking.

Moisture corrosion on the inner ring of a cylindrical roller bearing



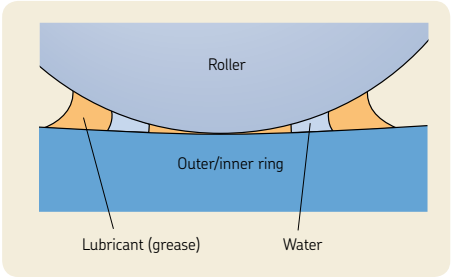

Moisture corrosion schematic

Fretting corrosion in the bore of bearings, resulting from inadequate shaft fit





Fretting corrosion in the bore of bearings, resulting from inadequate shaft fit

Fretting corrosion on the outer diameter of a bearing



False brinelling

False brinelling, also frictional corrosion damage, occurs in rolling element/raceway contact areas due to micro movements and resilience of the elastic contact under cyclic vibrations. Since it occurs when the bearing is stationary and loaded, the damage appears at rolling element pitch. Depending on the intensity of the vibrations, the lubrication condition and load, a combination of corrosion and wear occurs, forming shallow depressions in the raceways. Normally, the vibration results in a local break-through of the (protective) lubricant film, metal-to-metal contact, corrosion of the surfaces and abrasive wear. The appearance is therefore usually dull, often discoloured and sometimes reddish due to occurrence of the corrosion. Occasionally, the depressions can be shiny. False brinelling damage results in spherical cavities for ball bearings and lines for roller bearings.

Corrective action (against moisture corrosion)

Store bearings in dry areas, where the risk of considerable temperature changes, which can cause considerable condensed water, is practically eliminated. For transporting into tropical areas – use tropical safe packages.

Keep the preservative on new bearings and do not wipe away during handling and mounting process. Avoid contact of bearings with moisture, water, acid or other aggressive chemicals through appropriate sealing.

Corrective action (against fretting corrosion)

Depending on bearing ring load conditions (rotating or direction indeterminate, or stationary), equivalent bearing loads (light, normal or heavy) and material and temperatures, choose the correct shaft fit respectively housing fit (→ **chapter 4**, **page 65**).

Corrective action (against false brinelling)

False brinelling during transport can be avoided. Secure the bearings during transport in the following manner. First lock the shaft axially using a flat steel bent in a U-shape, while carefully preloading the ball bearing at the non-drive end. Then radially load the bearing at the drive end with a strap (→ **chapter 6, fig. 28** on **page 106**). By doing so, the rolling elements are locked in position and no relative movement can occur. Vibration damage is avoided.

In case of prolonged periods of standstill of motors mounted on site, turn the shaft from time to time. False brinelling can also be avoided by installing motors with spring preloaded bearings (→ **chapter 2**, *Preloading with springs* on **page 49**).

Don't place non-rotating electrical motor close to vibrating machines or into an environment where significant vibrations occur.



False brinelling damage in the inner and outer ring of a cylinder roller bearing. *False brinelling damage occurs at standstill and is characterized by damage at rolling element distance*

Electrical erosion

Electrical erosion can happen when a current passes from one ring to the other through the rolling elements of a bearing. *Excessive voltage* (high current density) and *Current leakage* (low current intensity) are 2 sub failure modes (→ **page 119**).

While "excessive voltage" is a common known electric phenomena, root cause for bearing currents by "current leakage" needs to be considered more closely.

There are three main causes for current passage through bearings in electric motors and generators, namely:

- electrostatic charging
- magnetic flux asymmetries
- high frequency currents due to common mode voltage in combination with voltage pulses of high slew rates

The first two phenomena, electrostatic charging and magnetic flux asymmetries, have been known for decades and represent the classical reasons for bearing currents. Non-vanishing common mode voltage in combination with voltage pulses of high slew rates became problematic due to the introduction of modern, fast switching, frequency converters.

Currents due to electrostatic charging

For instance, in belt driven fan applications, electrostatic charging effects may occur because of frictional electricity. Potentially DC voltage builds up at the shaft (referred to frame or ground, respectively) or across the bearings, thus discharge currents can flow through the bearings.

Currents due to magnetic flux asymmetries

With sinusoidal line voltages, the bearing current is generated because of asymmetries in the motor's magnetic circuit. Due to manufacturing limitations, it is impossible to obtain perfect electromagnetic symmetry. The asymmetric flux distribution inside the motor induces an axial shaft voltage which further leads to a low-frequency circulating current flowing through the bearings. The problem occurs especially for large motors with low numbers of pole pairs (e.g. 2-pole motors). They have larger flux asymmetries than small motors or motors with many poles. Some countermeasures have been developed, typically different means of insulation, but a better design of motors has been the main approach to minimise the problem.

High frequency currents

In the 1990s, the increasing use of variable speed drives (VSD) had a dramatic effect on the number of identified bearing failures. The reason was that the power-switching semiconductor devices used in frequency converters had changed from thyristors to GTOs (gate turn off transistors) and further to insulated gate bi-polar transistors (IGBTs) that dominate the VSD market today. These IGBTs are used to create the pulse width modulated (PWM) output voltage waveform (→ **diagram 2**) and thereby improve efficiency and dynamic performance of the drive. However, there is no advantage without compromise. So, apart from the classical voltages and currents generated by the motor itself, new effects have been observed when the motor is supplied from a PWM-converter.

One reason for parasitic high frequency currents is because the three phase output voltages from the converter are shaped as a series of square pulses. The arithmetic mean of the three phase voltages (referred to ground) is not zero, which creates a common mode voltage (→ **diagram 2**).

Furthermore, the PWM voltage signals change not only with high switching frequency (frequent pulses) but also very fast, within a very short time period (steep-edged pulses). Because of the high slew rates of the voltage signals (→ **diagram 3**, **page 118**), so-called dV/dt currents and related parasitic effects arise.

These two frequency converter inherent phenomena lead to parasitic high frequency bearing currents that can be classified as:

- high frequency shaft grounding currents
- high frequency circulating currents
- capacitive discharge currents

The three phases, their vectorial sum is not zero – but leads to the common mode voltage

Diagram 2

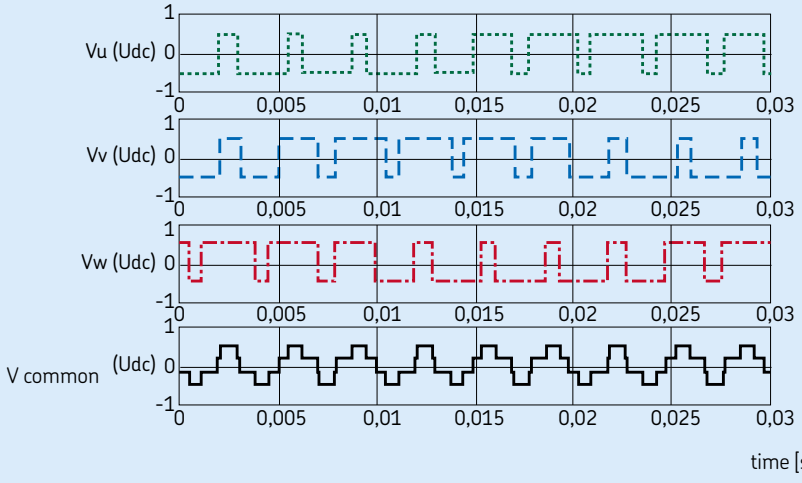

High frequency shaft grounding currents are mainly related to poor cabling (→ **fig. 5**) such as non-shielded and asymmetric cables. Due to the common mode voltage from the converter, a high frequency Protective Earth voltage can be induced. If the impedance of the return cable between motor terminal and frequency converter is too high and if the stator grounding is poor, the current will take a path from the stator, through the bearings and the shaft via ground back to the converter.

The common mode voltage causes a common mode disturbance, which produces a current asymmetry between the three phases in the stator windings. The sum of the current over the stator circumference is not zero. A high frequency flux variation is surrounding the shaft, creating a high frequency shaft voltage. This results in a potential risk for high frequency circulating currents flowing axially along the rotor, through one bearing and back through the other bearing.

When a rolling bearing is operating correctly, an oil film separates the rolling elements from the ring-raceways. From the electrical point of view this film acts as a dielectric, which is charged by the rotor voltage. For high frequencies, it forms a capacitor in which the capacitance depends on various parameters such as the type of lubricant, temperature and viscosity, plus film thickness. If the voltage reaches a certain limit, called the breakdown or threshold voltage of the lubricant, the capacitor will be discharged and a high frequency capacitive discharge current occurs. In this case, the current is limited by the internal stray-capacitances of the motor, but it will occur every time the converter switches.

Obviously, an induction motor fed by a frequency converter is a very complex drive system, which is influenced by many parameters. The whole drive, including supply, DC link, switching elements, cables, motor and load, has to be regarded as a total system consisting of inductances and distributed capacitances.

Fig. 5

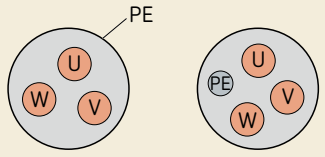

Shielded and symmetric versus a non-shielded and asymmetric cable (PE = Power Earth)

Voltage pulse of a GTO thyristor compared to an IGBT transistor

Diagram 3

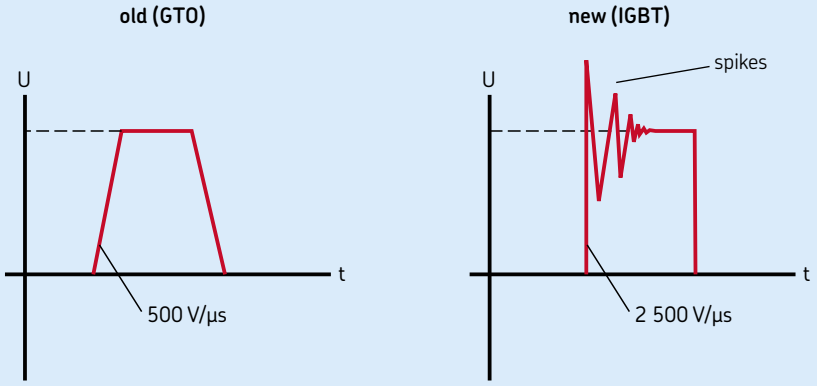

Electrical erosion processes

Excessive voltage

When an electric current passes through a bearing by going from one ring to the other via the rolling elements, damage can occur. At the contact surfaces, the process is similar to electric arc welding where there is a high current density over a small contact surface. The material is heated to temperatures ranging from tempering to melting levels. This causes the appearance of discoloured areas, varying in size, where the material has been tempered, re-hardened or melted. Craters are formed where the material has been melted.

Appearance: Single craters in raceways and/or rolling elements. Localized burns in raceways and on rolling elements.

Current leakage

Where current flows continuously in the form of arcs through the bearing in service, even at low intensity, the raceway surfaces are affected by the heat and erode as many thousands of micro-craters are formed, mostly on the rolling contact surface. These craters are closely positioned to one another and are small in diameter compared to the damage from excessive voltage. Flutes (washboarding) will develop from craters over time as a secondary effect and are found on the raceways of rings and rollers.

The extent of damage depends on a number of factors:

- type of bearing
- bearing size
- electrical regime
- bearing load
- speed and lubricant

In addition to bearing steel surface damage, the grease close to the damage might be carbonized, eventually resulting in poor lubricating conditions and consequently to surface distress and spalling.

Micro-cratering

Since frequency converters are more commonly used today, micro-cratering is by far the most common effect of electric current passage. The damage is characterized by molten pit marks. To the eye, this looks like a dull grey surface. Multiple micro-craters cover the rolling element and raceway surfaces. Crater sizes are extremely small, mostly from 5 to 8 µm in diameter, irrespective of being found on the inner ring, the loaded zone of the outer ring or on a rolling element. The real shape of these craters can only be seen under a microscope using great magnification.

Fluting or washboarding

Fluting or washboarding is seen as a pattern of multiple grey lines across the raceways. The fluting results from a mechanical resonance vibration caused by the rolling elements when rolling over micro-craters.

Fluting is not considered to be a primary failure mode. Instead, it is considered to be secondary bearing damage – something that becomes visible over time.

Excessive voltage
Raceway of an outer ring of a deep groove ball bearing.
1 Craters in a bead-like procession
2 Zig-zag pattern in the outer ring and on the ball





Current leakage
Dull grey surface of the rolling elements can be a sign of micro-cratering

Fluting or washboarding in a raceway caused by the passage of damaging electrical current.
Inner ring raceway of deep groove ball bearing





Fluting or washboarding in a raceway caused by the passage of damaging electrical current.
Outer ring raceway of deep groove ball bearing

Lubricant degradation

Local high temperatures cause the additives in the lubricant to char or burn the base oil. This causes the additives to be consumed more quickly. In case of grease lubrication, the grease turns black and hard. This rapid breakdown drastically shortens grease and bearing service life.

If relubrication is not performed in time, secondary damage due to poor lubrication might result.

Corrective action – a solution to electrical erosion

A key to solving the problem of electrical erosion in motor bearings is to insulate the shaft from the housing so that stray currents do not "seek ground" through the bearings. Although there is no single best way to do this, some solutions, like special shaft coatings or insulated end shields, can be more expensive than others.

A very cost-effective way to solve the problem is to use insulated bearings. One can apply a ceramic coating to one of the rings – INSOCOAT (→ **chapter 1**, **page 26**) – or use ceramic rolling elements and create a hybrid bearing (→ **chapter 1**, **page 28**). Either of these solutions will provide two functions, by acting as a bearing and an insulator.

SKF's insulated bearings have standard boundary dimensions according to ISO 15. They should be handled with the same care as standard bearings.



Lubricant degradation
Black discoloured grease on the cage bars caused by passage of current

Plastic deformation

Permanent deformation occurs whenever the yield strength of the material is exceeded.

Overload

Overload results from static or shock loads and leads to plastic deformation. This can be recognized by depressions at rolling element distance. Often, wrong mounting procedures are the reason for the problem, i.e., applying the mounting force to the wrong ring thereby producing a shock load over the rolling elements.

Indentation from debris

This results from (→ **fig. 6**) foreign particles (contaminants) that have gained entry into the bearing and are rolled into the raceways by the rolling elements. The size and shape of the dents depend on the nature of the particles. The raceway geometry at the dent is destroyed and lubrication is impaired. Stresses arise at the surface and fatigue leads to premature spalling of the surface.

Indentation from handling

Indentation from handling can occur when bearing surfaces are gouged by hard, sharp objects. Also, bearings must always be handled with care. Although made of highest-quality steel, localized overloads, e.g., from dropping a bearing, might dent the surfaces and make the bearing unserviceable.

Corrective action (against overload)

Use appropriate mounting tools and methods. In the case of cylindrical roller bearings, the use of a guiding sleeve is strongly recommended (→ **chapter 6, fig. 10** on **page 99**).

Corrective action (against indentations from debris and against indentations from handling):

- Do not unpack the bearing until immediately before mounting.
- Keep the workshop and tools clean.
- Use clean lubricant.
- Make sure the grease nipple is clean when relubricating.
- Make sure seals and counterfaces are in good condition.
- Handle bearings with care.



Overload
Mounting force was transmitted over the rolling elements, resulting in dents at rolling element distance, axially displaced



Overload
The dents, resulting from wrong mounting, are overrolled and quickly lead to spalls

Fig. 6

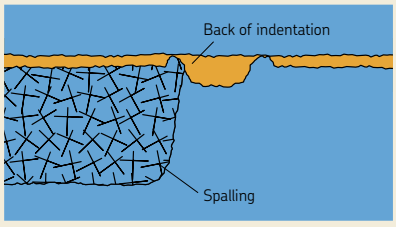

Indentation from debris
Dents destroy the geometry and lead to surface initiated fatigue in the area behind the spall

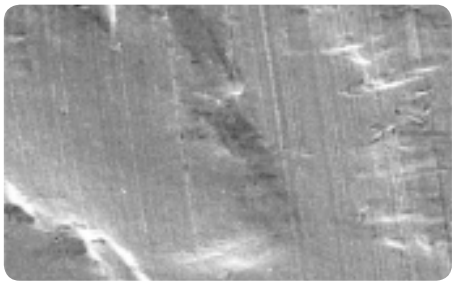

Indentation from debris
of soft particles



Indentation from debris
of hard particles

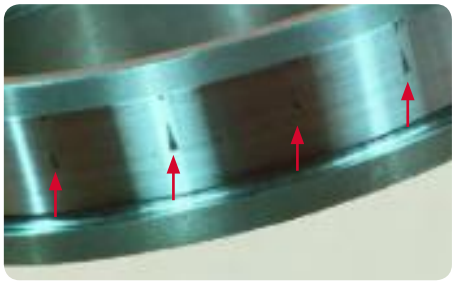

Indentation from handling
damage to inner ring of a cylindrical roller bearing due to wrong assembly

Fracture and cracking

Fracture (or cracking) occurs when the ultimate tensile strength of the material is exceeded.

Forced fracture

Forced fracture is caused by stress concentration in excess of the material tensile strength by local impact or by over-stressing. Two common causes are:

- Rough treatment (impact) when a bearing is being mounted or dismounted. Hammer blows applied to a hardened chisel directly against the ring may cause the formation of fine cracks with the result that pieces of the ring break off when the bearing is put into service.
- Excessive drive-up on a tapered seat or sleeve. As a result, the tensile stresses (hoop stresses) arising in the rings produce cracks when the bearing is put into operation .

Fatigue fracture

This starts when the fatigue strength is exceeded. A crack is initiated and will then propagate. Finally, the whole ring or cage cracks through. Fatigue fracture can occur when a tight fit has been used, leading to high hoop stresses. Then, the combined Hertzian and hoop stresses can lead to premature fatigue and thorough cracking of the ring.

Thermal cracking

Thermal cracking can occur when two surfaces slide heavily against each other. The frictional heat that is developed causes cracks, generally at right angles to the sliding direction.

Corrective actions (against fracture and cracking)

Apply fits according to **chapter 4**, **page 66** ff, and use appropriate mounting tools and methods. Handle bearings with care. Never expose bearings to impacts from any surroundings.



Forced fracture
Cracked flanges of a cylindrical roller bearing inner ring due to impact load



Fatigue fracture
Fatigue fracture of a cylinder roller bearing inner ring



Thermal cracking
Thermal cracking of a cylinder roller bearing outer ring shoulder



Thermal cracking
Thermal cracking of a cylinder roller bearing outer ring shoulder



8 SKF solutions

SKF Engineering Consultancy Services 126

SKF calculation tools 127

Application specific solutions . . . 128

Condition monitoring technologies and service 135

Certification program for electric motor service companies 141

SKF solutions

SKF has applied its extensive knowledge of industrial applications to develop system solutions that yield cost-effective results.

These solutions, some of which do not even incorporate bearings, underscore SKF's continuing effort to apply its core competencies in the areas of the future: mechatronics and electronics.

In this chapter, some solutions are presented that could be offered to solve real conditions for typical electric motor and generator applications.

SKF Engineering Consultancy Services

The basic information required to calculate and design a bearing arrangement for electrical motors can be found in this handbook. But there are situations where it is desirable to predict the expected bearing performance as accurately as possible, either because sufficient experience with similar bearing arrangements is lacking, or because economic and/or operational reliability are of extreme importance. In these cases, for example, it is advisable to consult SKF Engineering Consultancy Services. They provide calculations and simulations utilizing high tech computer programs, in combination with SKF's complete application know-how from one hundred years of accumulated experience in the field of rotating machine components.

The SKF application engineering specialists can support you with the following services:

- analyse application related technical problems
- suggest appropriate system solutions
- select the appropriate lubricant and lubrication method, sealing solutions and an optimized maintenance programme

SKF Engineering Consultancy Services provides a new approach to services concerning machines and installations for OEMs and end-users. Some of these service benefits are:

- faster development processes and reduced time to market
- reduced implementation costs by virtual testing before production starts
- improved bearing system by reducing noise and vibration levels
- extended service life by improving the lubrication or sealing system

Advanced computer programs

Within the SKF Engineering Consultancy Services, there are highly advanced computer programs which can be used for the following:

- analytical modelling of complete bearing systems, consisting of shaft, housing, gears, couplings, etc.
- static analysis to determine the elastic deformations and stresses in components of mechanical systems
- dynamic analysis to determine the vibration behaviour of systems under working conditions (virtual testing)
- visual and animated presentation of structural and component deflection
- optimizing system robustness, leading to for example reduced temperatures, lower noise and vibration levels, and less energy use
- optimizing system costs

The standard computer programs used within the SKF Engineering Consultancy Services for calculations and simulations are described briefly under SKF calculation tools (→ **page 127**).

For additional information about the SKF Engineering Consultancy Services, contact your local SKF representative.

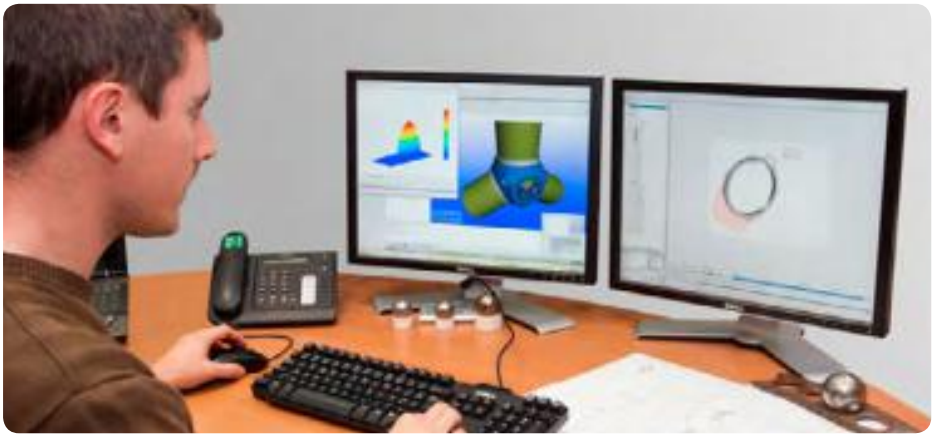

SKF calculation tools

SKF possesses one of the most comprehensive and powerful sets of modelling and simulation packages in the bearing industry. They range from easy-to-use tools based on *SKF Rolling Bearings Catalogue* formulae to the most sophisticated calculation and simulation systems, running on parallel computers.

SKF has developed a range of programs to satisfy a number of customer requirements; from fairly simple design checks, through moderately complex investigations, to the most advanced simulations for bearing and machine design. Wherever possible, these programs are available for customers to use on their computers. Moreover, particular care is taken to provide integration and interoperability of the different systems with each other.

Calculation tools available online via skf.com

Easy-to-use tools for bearing selection and calculation are available online via skf.com. The dedicated link depends on the country from where you access the SKF web. For details, please contact your local SKF representative or the SKF application engineering service. Bearing searches are available based on designation or dimensions, and simple bearing systems can be evaluated as well. The equations used are consistent with those used in this catalogue.

SKF's interactive engineering tools make it possible to generate drawings of bearings and housings that can be used in most commercially available CAD programs.

SKF bearing beacon

SKF bearing beacon is the mainstream bearing application program used by SKF engineers to find the best solution for customers' bearing systems. Working in a virtual environment, SKF engineers combine mechanical systems containing shafts, gears and housings with a precise bearing model for an in-depth analysis of the system's behaviour. The program can also analyze rolling fatigue in a bearing using the SKF rating life method. SKF bearing beacon is the result of years of research and development within SKF.

Orpheus

The numerical tool Orpheus is used to study and optimize the dynamic behaviour of noise and vibration-critical bearing applications, such as electric motors or gearboxes. The program is also used to solve complete non-linear equations of motion for a bearing system and the surrounding components, such as gears, shafts and housings. Orpheus can provide a profound understanding of the dynamic behaviour of an application, including the bearings, accounting for form deviations (waviness) and misalignment.

This enables SKF engineers to determine the most suitable bearing type and size as well as the corresponding mounting and preload conditions for a given application.

Beast

Beast is a simulation program that enables SKF engineers to simulate the detailed dynamics inside a bearing. It can be seen as a virtual test rig performing detailed studies of forces, moments etc. inside a bearing under virtually any load condition.

This enables the testing of new concepts and designs in a shorter time and with more information gained compared with traditional physical testing.

Other programs

In addition to the above-mentioned programs, SKF has developed dedicated computer programs that enable SKF scientists to provide customers with bearings having an optimized bearing surface finish which will extend bearing service life under severe operating conditions. These programs can calculate the lubricant film thickness in elasto-hydrodynamically lubricated contacts. In addition, the local film thickness, resulting from the deformation of the three dimensional surface topography inside such contacts, is calculated in detail as well as the consequent reduction of bearing fatigue life.

SKF engineers also use commercial packages to perform, for example, finite element or generic system dynamics analyses. These tools are integrated with the SKF proprietary systems enabling a faster and more robust connection with customer data and models.

Application specific solutions

Induction motors equipped with frequency converters

Since the 1990s, the use of pulse width modulated (PWM) frequency converters to adjust a motor's speed has increased. Since then, a growing number of premature bearing failures caused by electrical erosion (due to excessive voltage and current leakage), have been observed. These types of failures typically cause unexpected machine shutdowns that decrease production while significantly increasing maintenance and/or warranty costs.

Further details are given in **chapter 7**, *Electrical erosion processes*, **page 119**, and in **chapter 1**, *INSOCOAT* and *Hybrid bearings*, starting on **page 26**.

SKF shaft grounding ring kits TKGR series

While INSOCOAT and hybrid bearings protect the bearings from electrical passage, shaft grounding rings are a potential complement to divert electric current from shafts via the brushes to housing and ground and thereby protect the entire machine beyond the bearings.

The shaft grounding ring kits TKGR consist of a shaft grounding ring and a selection of mounting brackets and fittings and are specifically designed for retrofitting on existing IEC frame size industrial electric motors. They are easily mounted to the motor without major redesign of the motor endcap (→ **fig. 1**). Depending on the motor power and application, a TKGR may need to be used in combination with INSOCOAT or SKF hybrid bearings.

The standard IEC 60034-25 mentions as most effective, the following bearing current countermeasures:

- for smaller motor frame sizes
  2 insulated bearings plus a brush
- for larger machines
  2 insulated bearings, insulated coupling and a brush

Shaft grounding ring kit TKGR series

Fig. 1



Magnetic bearings for electric motors

SKF offers a wide range of active magnetic bearing systems for multiple industries. In particular, SKF magnetic bearings are used for high variable speed (HVS) electric motors to drive centrifugal compressors in the oil and gas industry and high-speed electric generators in the energy sector.

Active magnetic bearings (AMB) (→ **fig. 2** and **3**) are mechatronic systems that consist of mechanical components, electro magnets, sensors and a digital control system. The AMBs operate without physical contact between rotating and stationary parts and there is no need for lubricants. Thus, the reliability and availability of the rotating machine is increased substantially. Moreover, magnetic bearings are environmentally friendly.

For more information, please contact your local SKF representative.

Magnetic bearing cartridge

Fig. 2



Cut-away view of typical radial magnetic bearing

Fig. 3



Motor control in three-phase drives

Changing from direct current drives to three-phase drives offers many advantages. The three-phase AC induction motor is the most commonly used type of motor in industrial applications, offering a robust and virtually maintenance-free solution. However, in order to control speed and direction of rotation, it is necessary to use an additional electronic device that records the motor speed. In most cases, a resolver or an optical encoder is mounted on the motor to perform this function.

SKF sensor-bearing unit

SKF sensor-bearing units (→ **fig. 4** and **5**) are mechatronic components that combine sensor and bearing technology. They are designed to perform as incremental encoders for motor and/or machine control. These units use a sensor that is shielded from external influences. The sensor body and impulse ring are mechanically attached to the bearing, forming an integrated ready-to-mount unit. The compact dimensions of this encoder concept enables the integration of the encoder into the motor. This simplifies the motor design, mounting process and reduces the number of components as there is no coupling between motor shaft and encoder shaft needed. SKF designed and patented sensor-bearing units are simple, robust and provide compact and reliable encoding for highly demanding control. They are intended for applications with a rotating inner ring and stationary outer ring.

SKF standard sensor bearings are available for shaft diameters ranging from 15 to 45 mm. Other sizes can be made on request.

For applications where the rotor position has to be known (e.g. permanent magnet motors), SKF's latest development, a sensor bearing unit with resolver like signal output, is available. With its basic sin/cosine output, the absolute angle position of the rotor is provided.

SKF sensor-bearing unit

Fig. 4



The SKF sensor-bearing unit occupies no extra radial space, is well protected inside the motor and provides a reliable steady signal

Fig. 5

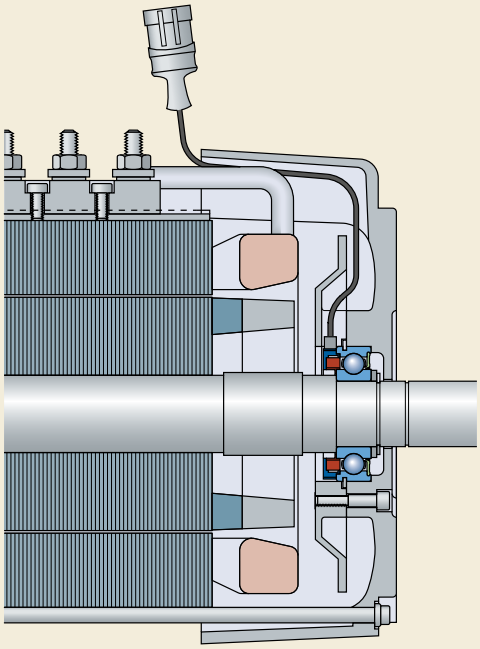

Large and very large electric machines

Today, the most common bearing solution in large and very large electric motors and generators consists of a sleeve bearing unit. This unit includes a sleeve bearing, housing and other components such as electrical insulation, and an air pressure chamber for flanged units.

The sleeve bearing unit is considered to be costly, especially under conditions during start-stop, or, changes in the direction of rotation (reversing) when the oil film thickness can drop to almost zero. This inadequate lubrication condition can result in metal-to-metal contact that can damage the sleeve bearing, causing it to fail prematurely. To avoid this condition, additional equipment is needed so that extra oil pressure can be supplied to the bearing.

To maximize the service life of a sleeve bearing, the lubricating oil must:

- create a sufficiently thick hydrodynamic film between the shaft and bearing under all operating conditions
- dissipate heat from the bearing to keep the temperature of the bearing and the oil temperature within acceptable limits

Generally, sleeve bearing units need special oil circulation systems that include coolers.

SKF flanged housing units with rolling bearings

SKF flanged housing units – AFC series

Developed as a cost-effective alternative to high cost sleeve bearing systems, SKF's AFC flanged housing unit shaft system carries and locates the shaft with two flanged housings, each equipped with a roller bearing.

The locating bearing is a spherical roller bearing whereas the non-locating bearing can be either a CARB toroidal roller bearing (→ **fig. 6**) or another spherical roller bearing. The advantage of the CARB toroidal roller bearing is that it accommodates axial displacement like a cylindrical roller bearing within the bearing and misalignment like a spherical roller bearing. This is particularly important in applications where thermal expansion of the shaft is a key operating parameter.

The SKF shaft system copes with reverse directions of rotation, low speeds and allows long rundown times of high inertia applications (e.g. generators in steam or water turbines). It bears radial and axial loads, accommodates thermal expansion of the shaft and shaft deflections. There is no need for extra components like thrust bearings or hydrostatic jacking devices. This can be particularly important for motors used in steel mills and marine propulsion units.

Designed for oil bath lubrication, the SKF shaft system does not need expensive oil circulation systems, which eliminates the need for pumps, pipes, oil sumps and coolers. Specially designed labyrinth seals are used to keep the lubricant in and contaminants out.

From a maintenance standpoint, regular oil changes are all that is necessary.

Compared to a sleeve bearing unit, the SKF shaft system is a more efficient, cost-effective solution that is simpler, has fewer components, and is easier to maintain. Variants using an oil reservoir with a smart oil level monitoring device, adjusting and replenishing the oil level during operation are also offered.

For further details, contact the SKF application engineering service.

An SKF flanged housing unit with a CARB toroidal roller bearing

Fig. 6

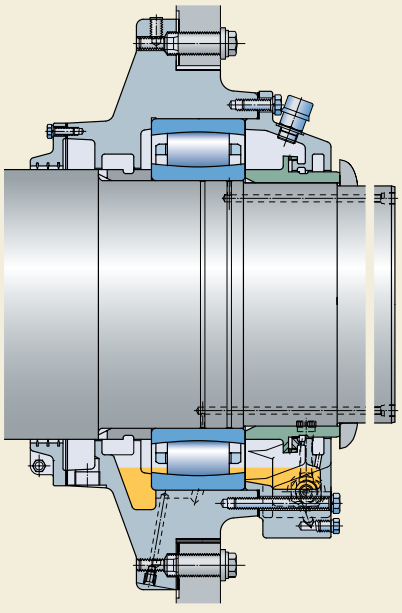

Traction motors

Traction motors used for electric drivelines are gaining popularity in the Off Highway and Mining segments.

To develop and design a complete bearing arrangement and to manage the logistics of all the individual components can be time consuming and expensive. Also, maintenance of traction motors with a traditional bearing arrangement design demand a lot of skills in workmanship and logistics.

A cost effective solution for the traction motor application challenges is the SKF traction motor bearing unit (TMBU).

SKF traction motor bearing unit

The traction motor bearing unit is a shielded and pre-lubricated bearing unit designed for flange mounting onto the housing (**→ fig. 7** and **8**). The unit contains a special high-quality grease that provides long service life even at high operating temperatures. The bearing unit is equipped with non-contact labyrinth seals that do not wear. The bearing unit is available with hybrid bearings with ceramic rolling elements, to prevent damage caused by electric current passage, Optional features include those that do the following: electrical insulation and monitoring of operational data like temperature, speed and absolute positioning for propulsion system control.

For additional information about TMBUs and traction motors, please refer to *SKF Railway Technical Handbook Vol 2* or contact your local SKF representative.

All-steel TMBU for locating bearing arrangements based on a deep groove ball bearing design

Fig. 7



Hybrid TMBU for non locating bearing arrangements based on a cylindrical roller bearing design

Fig. 8



Wind turbine generators

To convert wind power into electricity, wind turbines are equipped with a generator. Common sizes of wind turbines range from 750 kW up to 7 MW used both in onshore and offshore environments. Generators used in wind turbines are typically doubly fed asynchronous or permanent magnet synchronous types.

A doubly fed asynchronous generator is equipped with an active rotor winding that is fed by a frequency converter. This arrangement enables the turbine to maximize electricity production within a relatively wide range of wind speeds.

The permanent magnet synchronous generator uses the excitation field provided by a permanent magnet instead of a coil. In this case, the speed of the motor must always match the supply frequency. These generators do not require a DC supply for the excitation circuit, nor do they have slip rings or contact brushes. The generators are available for low speed, direct drive wind turbines, as well as medium and high speed turbines equipped with a gearbox.

Due to the specific design of doubly fed generators and the use of frequency converters, it is very likely that parasitic high frequency electrical currents will pass through the generator bearings (→ **chapter 7**, *Electrical erosion*, starting on **page 116**). As a consequence, electrical erosion, premature bearing failure and generator breakdowns can occur, making insulating both sides, DE (drive end) and NDE (non-drive end), necessary.

From a technical point of view, hybrid bearings are the most reliable solution to avoid passage of high frequency bearing current. They are not only excellent electrical insulators but when compared to standard bearings, they also feature excellent tribological properties and even under harsh operation allowing longer maintenance intervals.

A range of extra-large (XL) hybrid deep groove ball bearings is available from SKF. These bearings were especially designed and developed for wind turbine generators, to virtually eliminate the risk of harmful electrical currents passing through the rolling contact area within the generator bearings.

XL hybrid deep groove ball bearings have standard boundary dimensions that comply with ISO 15. There is no need for redesign, additional components or special tools during installation. They should be handled and mounted with the same care as standard bearings.

Wind turbine generator



Gear motors

The sealing solution used for gear motors is extremely important. The ingress of contaminants has been shown to have a direct impact on performance and service life.

In modern gearmotors the motor bearings are usually grease lubricated while the gearbox is oil lubricated.

The motor bearings are most often sealed and greased-for-life. In the gearbox, oil seals are typically used that are designed to keep oil in and contaminants out of the case. These external seals require:

- engineering
- space
- fine machining (and eventually hardening)
- logistics
- inventory
- special handling

A cost effective alternative to this work and cost intensive solution is the the ICOS unit from SKF.

ICOS units

To simplify the sealing solution and reduce costs, SKF developed a compact oil seal unit that integrates a unique spring loaded radial shaft seal into a bearing (→ **fig. 8**).

The unit, which can be used in either grease or oil lubricated applications without additional seals, requires less space than the typical two-component arrangement. The ICOS unit simplifies mounting and avoids expensive machining of the shaft because the inner ring shoulder serves as an optimal seal counterface.

ICOS units can also provide benefits in applications:

- with a heavily contaminated environment
- with presence of water flow
- incorporating brush motors
- where grease leakage cannot be tolerated

Fig. 8 *An ICOS unit*

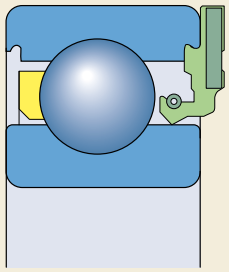

Condition monitoring technologies and service

The purpose of a condition monitoring system is to measure the condition of "wear" components and other functions that influence machine reliability. The advantage of condition monitoring using vibration analysis is that it acts as an early warning system. Consequently, this means that there is sufficient time for corrective actions and bearing replacement can be well planned (→ **diagram 1**).

Examples of components and systems that can be monitored are:

- bearings
- belt drives
- gearboxes
- electric motors

Multi-parameter monitoring

Jointly developed by SKF Condition Monitoring and the SKF Engineering & Research Centre in the Netherlands, multi-parameter monitoring is the most comprehensive, reliable and accurate approach to machinery monitoring and analysis. Collecting and analysing multiple measurement parameters greatly increases the ability to accurately and readily identify bearing damage and other machinery problems.

By measuring a number of machinery related parameters such as acceleration, velocity and displacement and process parameters such as speed, temperature, current, pressure and flow, users gain insight into a specific machine's condition. Advanced analysis techniques such as acceleration enveloping enable analysts to take the guesswork out of maintenance by supplying the required information needed in order to take the necessary measures to prevent unscheduled downtime.

Vibration

Traditional low frequency vibration monitoring remains essential in identifying problematic machinery conditions. Generally, malfunctions that cause vibration and loss of machine efficiency ultimately result in damage to the machine or its components. While low frequency vibration analysis can be an effective indicator of bearing damage, it may not be the most timely.

Acceleration enveloping

For early detection of machine damage, enveloping techniques are very effective. Enveloping enhances repetitive signals caused by the pulses emanating from a damaged bearing, for example. In the early stages, bearing damage generates a signal that may go undetected amid general machine vibration noise. The use of envelope detection makes it possible to pinpoint not only the nature, but the location of the bearing or gear damage.

Vibration data collectors/analyzers

Motors and other essential plant equipment such as pumps, fans, compressors, gearboxes, cranes and conveyors rely on bearings to keep machines running.

Economical, easy-to-use, hand-held instruments provide a quick and basic indication of potential problem areas.

Diagram 1

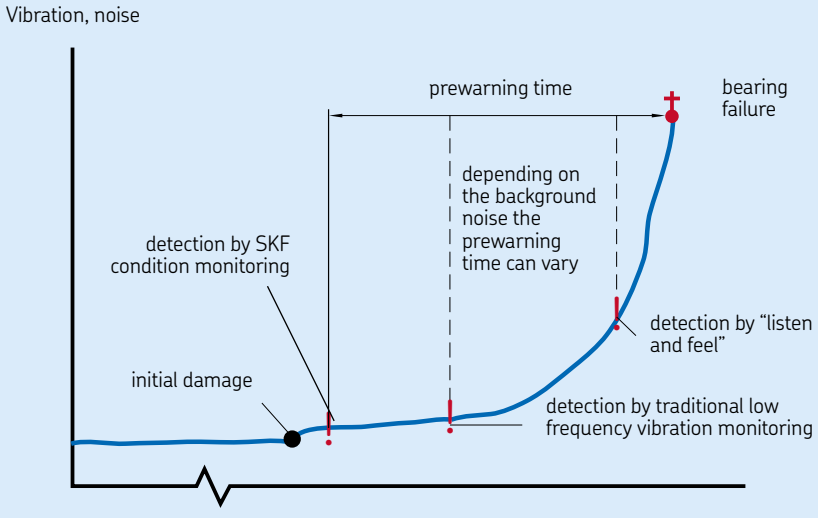

Periodic monitoring

SKF Machine Condition Advisor

The SKF Machine Condition Advisor is a rugged, easy to use, hand-held device that simultaneously measures vibration signals and temperature to indicate machine health and bearing damage – providing early warning of motor problems before a costly breakdown occurs.



SKF Machine Condition Advisor

SKF Microlog Analyzer series

Designed to help users establish or upgrade an existing condition monitoring program, SKF Microlog analyzers handle the tasks required to perform predictive maintenance on rotating machinery in countless industries, making it easier to collect, analyze, use and share machine condition data.

The SKF Microlog series includes route-based instruments, which work with powerful SKF predictive maintenance software systems and stand-alone instruments that offer on-the-spot advice and signal analysis capabilities.



SKF Microlog Analyzers

SKF Microlog Inspector systems

The SKF Microlog Inspector application is the latest, most advanced system developed by SKF for recording inspection data. Previously, the SKF MARLIN system was used by operators as a replacement for verbal or paper inspection trails to document their observations with accurate, consistent and actionable information. SKF Microlog Inspector takes the inspection process a step further.

SKF @ptitude Inspector software (→ **page 137**) allows for more in-depth analysis and communication between operations, maintenance, engineering and plant management.

When used with the SKF Wireless Machine Condition Detector, collected vibration data enables early problem detection in low, mid and high frequency ranges. Routine collection of vibration data during inspection rounds makes critical machine data available on a regular basis, eliminating unnecessary inspection trips and freeing up maintenance personnel to focus on scheduled repairs.



SKF Microlog Inspector and SKF Wireless Machine Condition Detector

Continuous monitoring

Online monitoring for around-the-clock bearing and machinery analysis offers significant advantages. With the SKF Multilog online systems, permanently installed sensors collect data from critical, hard-to-reach or problematic machines, eliminating the need for manual, walk-around data collection.

Combined with SKF @ptitude software, the systems display up-to-date information on machine operation for powerful real-time analysis. Such systems offer the greatest degree of worker safety and data consistency.



SKF Multilog IMx

SKF @ptitude Monitoring Suite

Condition monitoring software – the SKF @ptitude Monitoring Suite forms the basis for a completely integrated approach to condition monitoring, permitting fast, efficient and reliable storage, manipulation and retrieval of large amounts of complex machine and plant information. SKF @ptitude Monitoring Suite is a modular software solution that conforms to your needs. You may add or remove functionality as your system expands or is optimized to your condition monitoring needs.

A comprehensive software solution with powerful diagnostic and analytical capabilities – SKF @ptitude Analyst provides fast, efficient and reliable storage, analysis, and retrieval of complex asset information. It is scalable to your specific needs, whether it is operator inspection rounds, on-line and periodic condition monitoring data collection, or is in-depth vibration analysis and expert advice.



SKF @ptitude Monitoring Suite

Software tailored to the needs

SKF @ptitude Inspector is the SKF @ptitude Analyst software specifically targeted for operator driven reliability use. Combined with the SKF Microlog Inspector/SKF MARLIN system, it enables operations personnel to make their rounds, collecting machine condition, inspection and process data easily and efficiently in the palm-sized unit.

Electric motor test equipment

SKF provides a full spectrum of static, dynamic and online motor test and monitoring equipment for use by motor maintenance professionals.

Portable static motor testers are used to find insulation and circuit faults in motors when they are off-line, powered down or removed from service (static mode).

Portable dynamic test and monitoring equipment is used to test motor health and performance while the motors are powered on and working in their application environment.

Online monitoring equipment is a form of dynamic monitoring, except it is permanently installed (stationary), with networked connections to critical motor/machine systems to continuously monitor those systems for health or performance problems.

SKF also provides motor testing products for volume motor manufacturers that are used for quality control and assurance.

Static electric motor testing

SKF Static Motor Analyzers (Baker AWA-IV and Baker DX) are portable instruments that perform the widest range of insulation and circuit tests of any surge-based test equipment available today. These static testers discern faults that can't be found using just low-voltage tests. The Baker DX is highly configurable to meet the specific testing needs of motor maintenance professionals across the spectrum of industrial maintenance organizations, service and repair shops and motor manufacturing operations. The Baker AWA-IV is a computer-driven, Microsoft Windows-based analyzer that professionals use in the field as a foundation of their predictive motor maintenance programs. These static testers are also used with Baker Power Packs to boost voltages to test very large motors.

Dynamic electric motor testing

The SKF Dynamic Motor Analyzer – EXP4000 is used by motor maintenance professionals to discern any adverse conditions within a motor or machine system that could cause the system to underperform or fail. The EXP4000 is a Windows PC-driven analyzer that monitors the quality of the power source (relative to a motor's specifications), the load placed upon the motor by the equipment it is driving, and performance of the motor itself.



SKF Static Motor Analyzer – Baker DX



SKF Static Motor Analyzer – Baker AWA-IV



SKF Dynamic Motor Analyzer – EXP4000

Online motor monitoring

The SKF Dynamic Motor Analyzer – NetEP is a permanent, stationary online motor monitoring solution that maintenance professionals can use to continuously monitor critical motors by gathering motor system health data at regular intervals throughout a day, 365 days a year. The NetEP is a networked device that delivers monitoring information to a central office location, or to any personal computer anywhere in the world with an Internet connection.



SKF Dynamic Motor Analyzer – NetEP

Motor quality control and quality assurance testing

SKF's Baker WinAST and Baker WinTATS systems are volume-production motor manufacturing testers that volume electric motor manufacturers use to assure their motors meet their product quality standards. The Baker WinAST is a fully-automated, rack-based stator tester that is used to test from dozens to thousands of motors (or generators) per day, depending upon the sizes and types of motors or testing fixtures used. It can test motors ranging in size from fractional horsepower units on up to 1 000 kW electric motors.

Baker WinTATS is a traction armature testing system that is used by volume manufacturers of large motor armatures for quality assurance. Like the Baker WinAST, the Baker WinTATS is a rack-based unit that performs a full spectrum of standard insulation (AC and DC, HiPot, surge) and resistance tests as well as specialized tests (e.g., corona, field map and rotation-direction). SKF's motor quality control test systems include single-function quality control units, which include the Baker DT05 impulse tester, the Baker RT45 low resistance Ohm meter, and the HP91 high-voltage insulation tester.



SKF Static Motor Analyzer – Baker WinAST

Maintenance products

In an area of increased downsizing of the fixed work force and increased pressures to produce more in less time, SKF focuses on providing customers with the tools and services they need to remain competitive.

The vast assortment of SKF maintenance products provides simple, flexible and reliable solutions to its customers' maintenance needs. Whether the customer is looking for the latest hydraulic jaw puller or other tools, SKF has the product that matches the requirements.

For more information or a detailed product catalogue, contat your local SKF representative or visit SKF online at skf.com.

Electrical discharge currents

Electrical discharges are a result of motor shaft voltages discharging to earth through the bearing, causing electrical erosion, lubricant degradation and ultimately bearing failure, see **chapter 7**, *Electrical erosion*, **page 116**. An electrical discharge detector can help detect the presence of electrical discharge currents, allowing remedial action to be taken.



The SKF Electrical Discharge Detector Pen (– TKED 1) is a simple to use handheld instrument that can help in detecting the presence of harmful electrical discharges in electric motor bearings

Certification program for electric motor service companies

SKF Certified Rebuilder Electric Motor is a program designed by SKF to satisfy industrial users' demands for the most reliable repair operations; it focuses on identifying the root cause of bearing damage, the world class repair methods and the electrical and mechanical motor conformance tests that allows the motor to achieve optimum performance.

Developed as a collaborative effort among eligible repair shops, SKF Authorized Distributors and SKF, the SKF Certified Rebuilder program enhances the expertise of qualified electric motor repair shops through employee training, equipment and technology upgrades, and new standards for repair consistency and quality.

SKF can provide you with a list of Certified Rebuilders near your location or can meet with you to assess your actual service provider and discuss more about the benefits of this program.

Visit the SKF Certified Rebuilder program online at skf.com/rebuilder.

