OGH302

Diffuse reflection sensor with background suppression

OGH-HPKG/US100

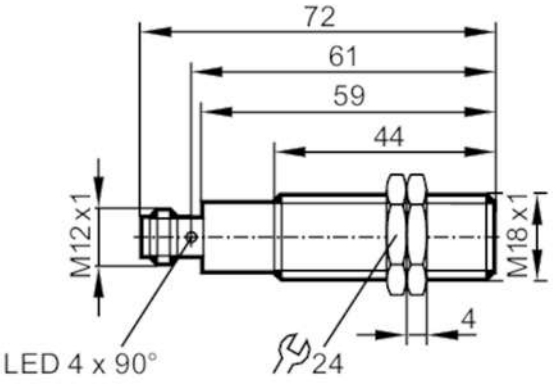

transmitter in lower lens
receiver in upper lens

Product characteristics		
Type of light		red light
Housing		threaded type
Application		
Special feature		Background suppression
Function principle		Diffuse reflection sensor
Electrical data		
Operating voltage	[V]	10...36 DC
Current consumption	[mA]	25
Protection class		II
Reverse polarity protection		yes
Type of light		red light
Wave length	[nm]	624
Outputs		
Electrical design		PNP
Output function		light-on mode
Max. voltage drop switching output DC	[V]	2.5
Permanent current rating of switching output DC	[mA]	150; (200 (...60 °C))
Switching frequency DC	[Hz]	1000
Short-circuit protection		yes
Type of short-circuit protection		pulsed
Overload protection		yes
Detection zone		
Range	[mm]	< 200; (white paper 200 x 200 mm 90% remission)
Range on white object (90 % remission)	[mm]	< 200

OGH302

Diffuse reflection sensor with background suppression

OGH-HPKG/US100

Range on grey object (18 % remission) [mm]		< 200
Range on black object (6 % remission) [mm]		< 190
Range adjustable		no
Max. light spot diameter [mm]		17
Light spot dimensions refer to		Range
Background suppression available		yes
Operating conditions		
Ambient temperature [°C]		-25...80
Protection		IP 65; IP 67; IP 68; IP 69K
Tests / approvals		
EMC	EN 60947-5-2	
MTTF [years]		372
Mechanical data		
Weight [g]		59.3
Housing		threaded type
Dimensions [mm]		M18 x 1 / L = 72
Thread designation		M18 x 1
Materials		housing: stainless steel (316L/1.4404); Sealing: EPDM
Lens material		PMMA
Displays / operating elements		
Display	switching status	1 x LED, yellow
Accessories		
Items supplied		lock nuts: 2
Remarks		
Remarks		operating voltage "supply class 2" according to cULus
Pack quantity		1 pcs.
Electrical connection		

Connector: 1 x M12; coding: A

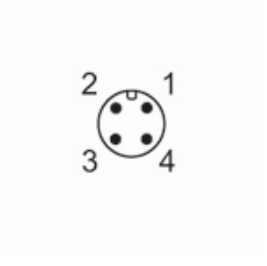

OGH302

Diffuse reflection sensor with background suppression

OGH-HPKG/US100

Connection

