30848-473 PLUG-IN UNIT U-PROFILE FRONT PANEL FOR HANDLE FORM 1, 6 U, 10 HP, 2.5 MM, AL, FRONT ANODIZED, REAR CONDUCTIVE

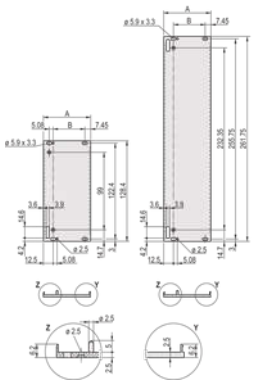

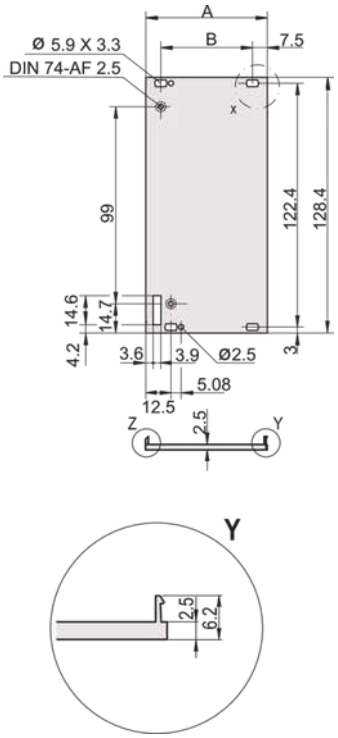

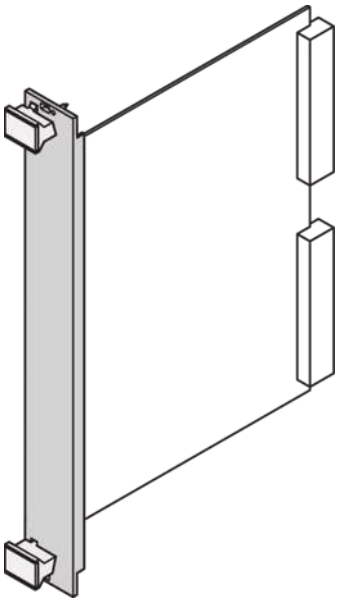

KEY FEATURES

- Al profile, front anodized, rear conductive
- Front panel, U-profile, shieldable
- Alignment pin pressed-in, stainless steel

PRODUCT ATTRIBUTES

- Product Type: Front Panel
- Type: Front Panel with Handle (PIU)
- Accessory Type: Front panel
- Handle Type: Trapezoid, Type 1
- Mounting: Screw-on Front
- EMC Shielding: No (Retrofittable)

EMC Gasket Type: Textile

Material: Aluminum

Front Finish: Anodized

Rear Finish: Conductive

Treated Edges: No

Rack Height: 6 U

Height: 261.8 mm

Rack Width: 10 HP

Width: 50.5 mm

Depth: 2.5 mm

Complies With: IEC 60297-3-101; IEEE 1101.1/11

Package Quantity: 5

ADDITIONAL PRODUCT DETAILS

U-profile front panel. Enables the assembly of form 1 trapezoid form extraction handle. The front panel can be shielded with a textile gasket.

Please order EMC profile seal separately.

Please take into consideration that deliveries may be carried out in the stated SPQs (SPQ, e.g. 5 pieces, 10 pieces, 50 pieces, etc.). Differing order quantities (e.g. 2 pieces) may be changed to the next possible delivery quantity = Standard Pack Quantity.

CERTIFICATIONS

RoHS COMPLIANT

North America
All locations
+1.763.422.2661
Chat with us:
schroff.nvent.com

Europe
Straubenhardt, Germany
+49.7082.794.0
Betschdorf, France
+33.3.88.90.64.90
Warsaw, Poland
+48.22.209.98.35
Assago, Italy
+39.02.932.7141
Chat with us:
schroff.nvent.com

Asia
Shanghai, China
+86.21.2412.6943
Qingdao, China
+86.532.8771.6101
Singapore
+65.6768.5800
Shin-Yokohama, Japan
+81.45.476.0271
Chat with us:
schroff.nvent.com

Middle East & India
Dubai, United Arab Emirates
+971.4.378.1700
Bangalore, India
+91.80.6715.2001
Istanbul, Turkey
+90.216.250.7374
Chat with us:
schroff.nvent.com

nVent

Our powerful portfolio of brands:
nVent.com **CADDY ERICO HOFFMAN RAYCHEM SCHROFF TRACER**

© 2024 nVent. All nVent marks and logos are owned or licensed by nVent Services GmbH or its affiliates. All other trademarks are the property of their respective owners.

nVent reserves the right to change specifications without notice.