II5863

Inductive sensor

IIA3010ZBPKG/V4A/US-100-DPS/AU

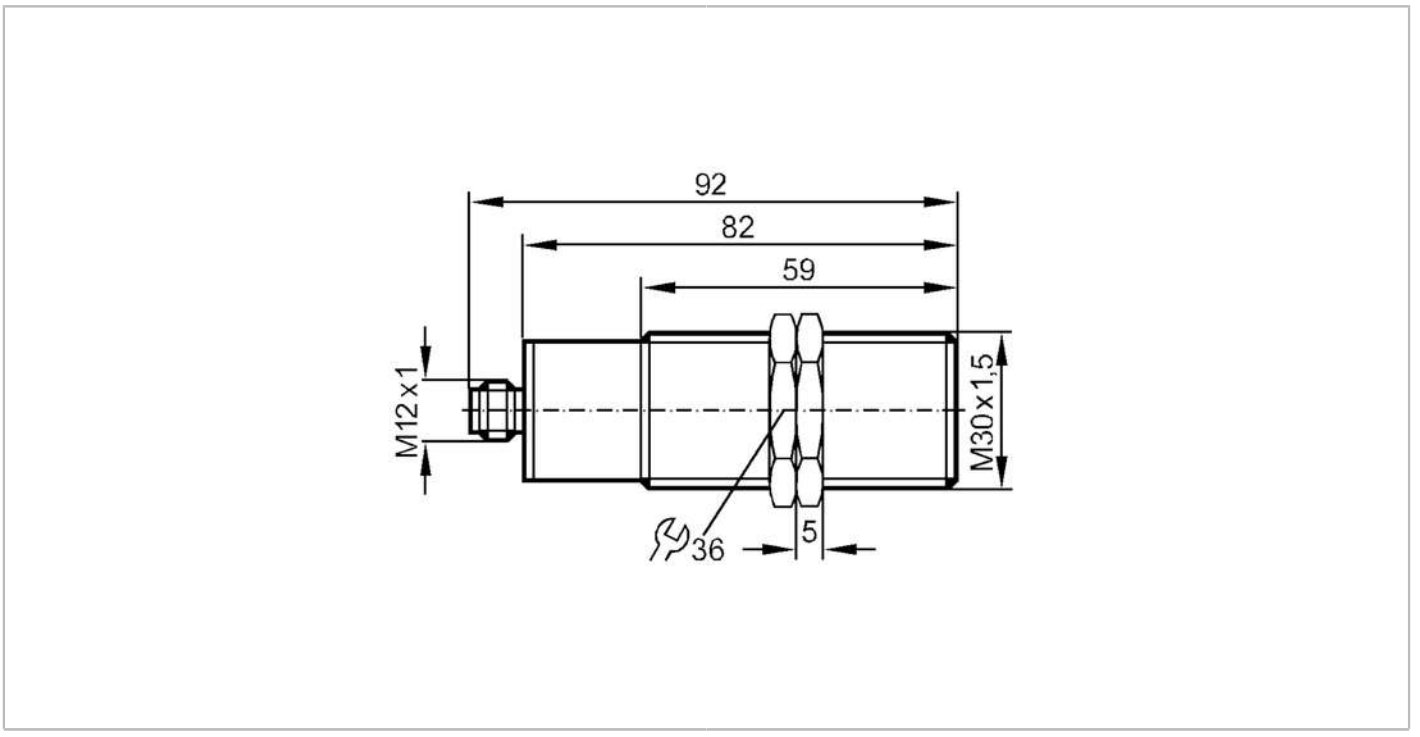

Product characteristics		
Electrical design		PNP
Output function		normally open
Sensing range	[mm]	10
Housing		threaded type
Dimensions	[mm]	M30 x 1.5
Application		
Special feature		Gold-plated contacts
Electrical data		
Operating voltage	[V]	10...36 DC
Current consumption	[mA]	15; (24 V)
Protection class		III
Reverse polarity protection		yes
Outputs		
Electrical design		PNP
Output function		normally open
Max. voltage drop switching output DC	[V]	2.5
Permanent current rating of switching output DC	[mA]	100
Switching frequency DC	[Hz]	250
Short-circuit protection		yes
Type of short-circuit protection		pulsed
Overload protection		yes

II5863

Inductive sensor

IIA3010ZBPKG/V4A/US-100-DPS/AU

Detection zone		
Sensing range	[mm]	10
Real sensing range Sr	[mm]	10 ± 10 %
Operating distance	[mm]	0...8.1
Accuracy / deviations		
Correction factor		steel: 1 / stainless steel: 0.7 / brass: 0.5 / aluminium: 0.4 / copper: 0.3
Hysteresis	[% of Sr]	3...20
Switch point drift	[% of Sr]	-10...10
Operating conditions		
Ambient temperature	[°C]	-25...100
Protection		IP 67
Tests / approvals		
EMC		EN 60947-5-2
		EN 55011 class B
MTTF	[years]	1853
Mechanical data		
Weight	[g]	161.5
Housing		threaded type
Mounting		flush mountable
Dimensions	[mm]	M30 x 1.5
Thread designation		M30 x 1.5
Materials		stainless steel (1.4571/316Ti); PBT
Accessories		
Items supplied		lock nuts: 2
Remarks		
Pack quantity		1 pcs.

Electrical connection - plug

Connector: 1 x M12; coding: A; Contacts: gold-plated



II5863

Inductive sensor

IIA3010ZBPKG/V4A/US-100-DPS/AU

Connection

