Product data sheet
Characteristics

XCMD2102L5
Limit switch, Limit switches XC Standard, XCMD, steel roller plunger, 1NC+1 NO, snap, 5 m



Main

Range of product	Telemecanique Limit switches XC Standard
Series name	Standard format
Product or component type	Limit switch
Device short name	XCMD
Sensor design	Miniature
Body type	Fixed
Head type	Plunger head
Material	Metal
Body material	Zamak
Head material	Zamak
Fixing mode	By the body
Movement of operating head	Linear
Type of operator	Spring return roller plunger metal
Type of approach	Lateral approach, 2 directions
Number of poles	2
Contacts type and composition	1 NC + 1 NO
Contact operation	Snap action

Complementary

Switch actuation	By 30° cam
Electrical connection	Removable cable connector
Cable length	5 m
Cable composition	5 x 0.75 mm²
Wire insulation material	PvR
Contacts insulation form	Zb
Positive opening	With
Positive opening minimum force	35 N
Minimum force for tripping	7 N
Maximum actuation speed	0.5 m/s
Contact code designation	B300, AC-15 (Ue = 240 V), Ie = 1.5 A conforming to EN/IEC 60947-5-1 appendix A R300, DC-13 (Ue = 250 V), Ie = 0.1 A conforming to EN/IEC 60947-5-1 appendix A
[Ui] rated insulation voltage	300 V (pollution degree 3) conforming to UL 508 400 V (pollution degree 3) conforming to IEC 60947-5-1 300 V (pollution degree 3) conforming to CSA C22.2 No 14
[Uimp] rated impulse withstand voltage	4 KV IEC 60664 4 kV IEC 60947-1
Short-circuit protection	6 A cartridge fuse, type gG
Electrical durability	5000000 Cycles, DC-13, 120 V, 1 W, operating rate <60 cyc/mn, load factor: 0.5 conforming to IEC 60947-5-1 appendix C 5000000 Cycles, DC-13, 24 V, 3 W, operating rate <60 cyc/mn, load factor: 0.5 conforming to IEC 60947-5-1 appendix C 5000000 cycles, DC-13, 48 V, 2 W, operating rate <60 cyc/mn, load factor: 0.5 conforming to IEC 60947-5-1 appendix C
Mechanical durability	10000000 cycles

The information provided in this documentation contains general descriptions and/or technical characteristics of the performance of the products contained herein.
This documentation is not intended as a substitute for and is not to be used for determining suitability or reliability of these products for specific user applications.
It is the duty of any such user or integrator to perform the appropriate and complete risk analysis, evaluation and testing of the products with respect to the relevant specific application or use thereof.
Neither Schneider Electric Industries SAS nor any of its affiliates or subsidiaries shall be responsible or liable for misuse of the information contained herein.

Width	30 mm
Height	50 mm
Depth	16 mm

Environment

Shock resistance	25 gn for 18 ms conforming to IEC 60068-2-27
Vibration resistance	5 gn (f= 10…500 Hz) conforming to IEC 60068-2-6
IP degree of protection	IP66 conforming to IEC 60529 IP67 conforming to IEC 60529 IP68 conforming to IEC 60529
IK degree of protection	IK06 conforming to EN 62262
Overvoltage category	Class I
Ambient air temperature for operation	-25…70 °C
Product certifications	CSA UL
Standards	EN 60947-5-1 UL 508 IEC 60947-5-1 CSA C22.2 No 14

Packing Units

Package 1 Weight	0.506 kg
Package 1 Height	0.300 dm
Package 1 width	2.000 dm
Package 1 Length	2.000 dm

Offer Sustainability

Sustainable offer status	Green Premium product
EU RoHS Directive	Pro-active compliance (Product out of EU RoHS legal scope) EU RoHS Declaration
Mercury free	Yes
RoHS exemption information	Yes
Environmental Disclosure	Product Environmental Profile
Circularity Profile	End Of Life Information
California proposition 65	WARNING: This product can expose you to chemicals including: Diisononyl phthalate (DINP), which is known to the State of California to cause cancer, and Di-isodecyl phthalate (DIDP), which is known to the State of California to cause birth defects or other reproductive harm. For more information go to www.P65Warnings.ca.gov

Contractual warranty

Warranty	18 months

Dimensions

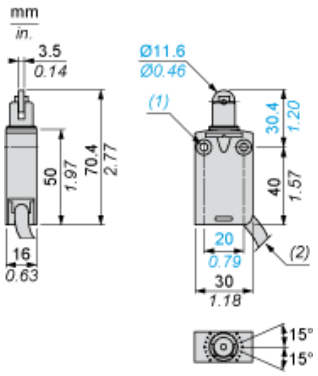

(1) 2 fixing holes Ø 4.2 mm, counterbored Ø 8 mm by 4 mm deep.
(2) External diameter of cable 7.5 mm.

Mounting

Sweep of Connecting Cable

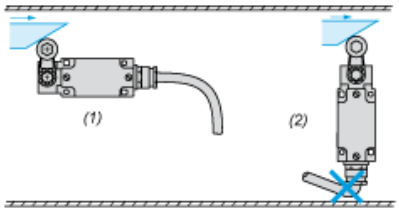

(1) Recommended
(2) To be avoided

Setting-up

Plunger or Multi-directional Heads

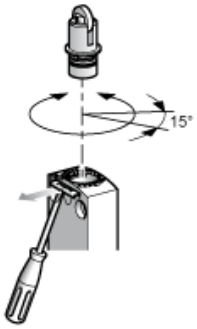

Wiring Diagram

2-pole NC + NO Snap Action

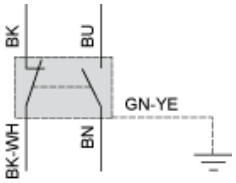

(BK) Black
(BK-WH) Black White
(BU) Blue
(BN) Brown
(GN-YE) Green Yellow

Characteristics of Actuation

Switch Actuation by 30° Cam

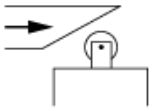

Functional Diagram

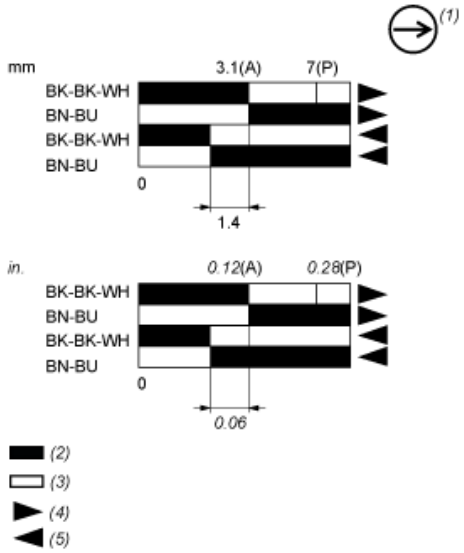

(P) Positive opening point
(A) Cam displacement
(1) NC contact with positive opening operation
(2) Closed
(3) Open
(4) Tripping
(5) Resetting
(BK) Black
(BK-WH) Black White
(BU) Blue
(BN) Brown